ORDER NO. MTV0601445CE

# Service Manual

## Colour Television

## TX-29F355R

### GP21 Chassis

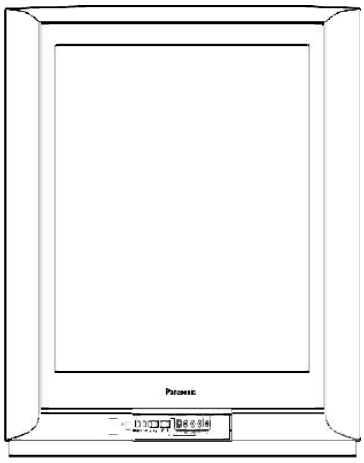

## SPECIFICATIONS

**Specifications**

| | |
|---|---|
| Power Source : | AC AUTO 110-240V, 50/60Hz |
| Power Consumption : | 110W |
| Aerial Impedance : | 75 Ω unbalanced |
| | Coaxial type |
| Receiving System : | 17 Systems |
| Receiving Channels : | |
| VHF | |
| 2 - 12 | PAL/SECAM B, K1 |
| 0 - 12 | PAL B (AUST.) |
| 1 - 9 | PAL B (N.Z.) |
| 1 - 12 | PAL/SECAM D |
| 1 - 12 | NTSC M (JAPAN) |
| 2 - 13 | NTSC M (U.S.A) |
| UHF | |
| 21 - 69 | PAL G, H, I/SECAM G, K, K1 |
| 28 - 69 | PAL B (AUST.) |
| 13 - 57 | PAL D, K |
| 13 - 62 | NTSC M (JAPAN) |
| 14 - 69 | NTSC M (U.S.A.) |
| CATV | |
| S1 - S20 | (OSCAR) |
| 1 - 125 | (U.S.A. CATV) |
| C13 - C49 | (JAPAN) |
| S21 - C41 | (HYPER) |
| Z1 - Z37 | (CHINA) |
| 5A, 9A | (AUST.) |
| Intermediate Frequency : | |
| Video | 38.0 MHz |
| Sound | 31.5 MHz (D, K, K1) |
| | 32 MHz (I) |
| | 32.5 MHz (B, G) |
| | 33.5 MHz (M) |
| Colour | 33.57 MHz (PAL) |
| | 33.6 MHz (SECAM) |
| | 33.75 MHz (SECAM) |
| | 34.42 MHz (NTSC) |
| Video / Terminals : | |
| AV 1, 2 | Y:1 Vp-p, 75 |
| S-Video In | C:0.3 Vp-p, 75 |
| DVD | |
| Y | 1.0 Vp-p, 75 |
| PB | 0.7 Vp-p, 75 |
| YR | 0.7 Vp-p, 75 |
| AV 1, 2, 3, 4 | |
| Video In | 1 Vp-p, 75 |
| Audio In | Approx. 0.5V, 47k |
| Monitor Out | Video Out 1 Vp-p, 75 |
| | Audio Out Approx. 0.5V, 1k |
| High Voltage : | 31.0±1.0V |
| | at zero beam current |
| Picture Tube : | A68LZU185X-E |
| | 67.6cm (29 inches) |
| | Measured diagonally, |
| | 90° deflection |
| Audio Output : | 10W+10W = 20W |
| Dimensions : | Height : 578 mm |
| | Width : 786 mm |
| | Depth : 508 mm |
| Mass : | 43 kg (Net Wt.) |

Specifications are subject to change without notice. / Mass and dimensions shown are approximate.

**2006 Matsushita Electric Industrial Co., Ltd. All rights reserved.**
**Unauthorized copying and distribution is a violation of law.**

# 1. Safety Precautions

## 1.1. General Guide Lines

1. It is advisable to insert an isolation transformer in the AC supply before servicing this hot chassis.
2. When servicing, observe the original lead dress, especially the lead dress in the high voltage circuits. If a short circuit is found, replace all parts which have been overheated or damaged by the short circuit.
3. After servicing, see to it that all the protective devices such as insulation barriers, insulation papers, shields and isolation R-C combinations, are properly installed.
4. When the receiver is not to be used for a long period of time, unplug the power cord from the AC cord outlet.
5. Potential, as high as 32.0kV is present when this receiver is in operation. Operation of the receiver without the rear cover involves the danger of a shock hazard from the receiver power supply. Servicing should not be attempted by anyone who is not thoroughly familiar with the precautions necessary when working on high voltage equipment. Always discharge the anode of the picture tube to the receiver chassis before handling the tube. After servicing make the following leakage current checks to prevent the customer from being exposed to shock hazards.

## 1.2. Leakage Current Cold Check

1. Unplug the AC cord and connect a jumper between the two prongs on the plug.
2. Turn on the receiver's power switch. / Measure the resistance value, with an ohmmeter, between the jumper AC plug and each exposed metallic cabinet part on the receiver, such as screw heads, aerials, connectors, control shafts, etc. When the exposed metallic part has a return path to the chassis, the reading should be between 4 M and 20 M . When the exposed metal does not have a return path to the chassis, the reading must be infinite.

## 1.3. Leakage Current Hot Check (Fig. 1)

1. Plug the AC cord directly into the AC outlet. Do not use an isolation transformer for this check.
2. Check a 2 k Ω non-inductive resistor and an AC/DC current meter, in series with each exposed metallic part on the receiver in turn and an earth such as a water pipe.
   The current from any point should not exceed 0.7 mA peak AC or 2 mA DC. In the case of a measurement being outside of these limits specified, there is a possibility of a shock hazard and the receiver should be repaired and rechecked before it is returned to the customer.

Fig. 1

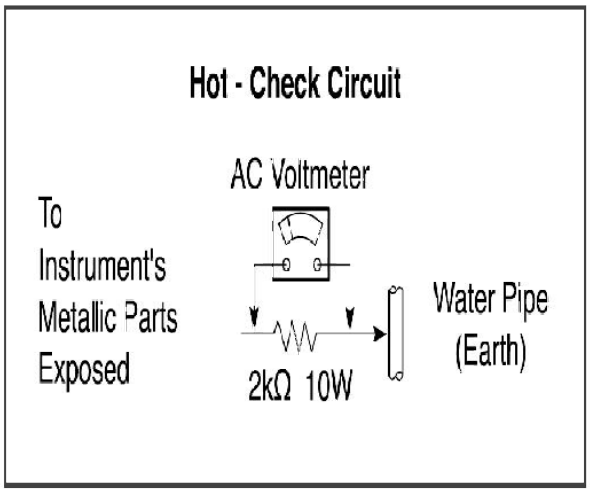


,

### 1.4. X-Radiation

**Warning:**
**The potential sources of X-Radiation in TV set are the EHT section and the picture tube. When using a picture tube test jig for service, ensure that jig is capable of handling 32.0kV without causing X-Radiation.**
**Note: It is important to use an accurate periodically calibrated high voltage meter.**

1. Set the brightness to minimum.
2. Use the remocon to get into Service Mode.
3. Measure the EHT. The meter reading should indicate 31.0±1.0kV. If the meter indication is out of tolerance, immediate service and correction is required to prevent the possibility of premature component failure.
4. To prevent the possibility X-Radiation, it is essential to use the specified picture tube, if service replacement becomes necessary.

### 1.5. GP21 Chassis Block Diagram

## 2. Service Hints

## 2.1. Service Position for E-Board

1. Remove the back cover.
2. Stand the TV set as shown in Fig. 2.
3. Remove the A-Board from the TV set by pulling the main board out as shown in Figure 2.

Fig. 2

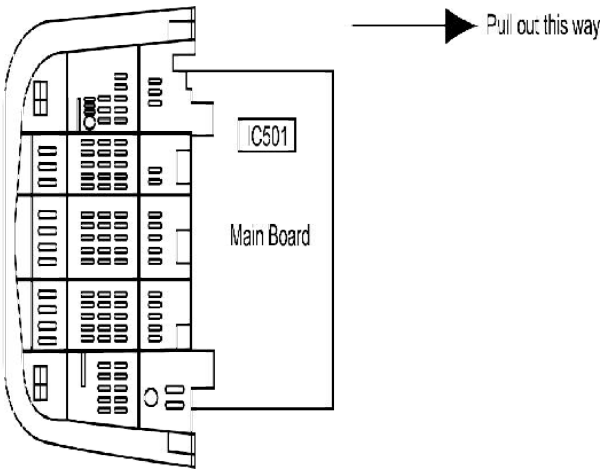


## 2.2. Factory Mode Adjustment

**How to set :**

To set the Factory mode, press Volume 0 dac on the TV and Timer Setting 30 min. on the remote control and press Volume (-) Down button on the TV together press recall on the remote control. / CHK should appear on right of TV screen.

**To Set Self-Check :**

Press the Volume Down button on TV then press the Off Timer button on remote control.

## 2.3. Adjustment for White Balance

**Preparation:**

1. Receive the white balance pattern and aging should have been performed over 30 minutes.
2. Set the picture menu to DYNAMIC NORMAL.
3. Degausse the CRT face.
4. Fix the CRT colour analyzer receiver unit to CRT face.

**Adjustment of Low Light.**

1. Adjustment Sub Bright, so that Y = 6.5 ± 1.0 nit.

2. Adjustment R-CUT OFF, so that X = 0.241 ± 0.005 nit.

3. Adjustment G-CUT OFF, so that Y = 0.241 ± 0.005 nit.

**Adjustment of High Light**

1. Adjustment Sub Bright, so that Y = 190 nit.

2. Adjustment R-Drive, so that X = 0.255 ± 0.003 nit.

3. Adjustment B-Drive, so that Y = 0.258 ± 0.003 nit.

## 2.4. Adjustment for CRT CUT OFF

**Preparation:**

1. Connect the oscilloscope probe to TPL7.
2. Screen VR min.
3. Set the data Sub Bright, Bright.
4. In service Mode at “Bright” dac press [5] in factory mode to enter vertical line and adjust by volume down or up button.
5. Adjust “Screen VR” until 1-H Line appears.

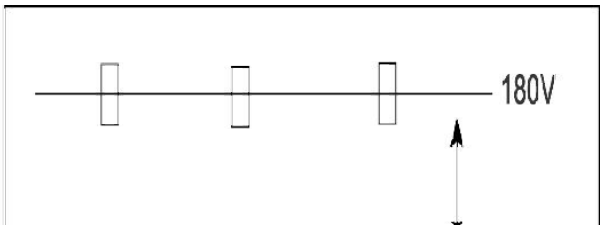


## 2.5. Adjustment Procedure

### 2.5.1. +B Voltage

**Item / preparation**

1. Operate the TV set.
2. Set control as follows :
   Brightness ..... minimum
   Contrast ..... minimum

**Adjustment procedure**

1. Confirm the DC voltage at the indicated test points, as follows :

**TPD 023 ~ GND : 136.0V ± 1V**
**TPD 021 ~ GND : 10.8V ± 1V**
**TPD 012 ~ C858(-) : 16.5 ± 2V**

### 2.5.2. High Voltage

**Item / preparation**

1. **Receive the crosshatch pattern.**
2. **Set to 0 Beam.**
   **Screen VR ..... minimum**
   **Contrast ..... minimum**

**Adjustment procedure**

1. **Connect a DC voltage meter to TPD 023 and confirm the +B voltage is 136.0 ± 1V.**
2. **Connect a high frequency voltmeter to heater and confirm that voltage reads 6.3 ± 0.3 (VRMS).**
3. **Normalize the brightness and contrast.**

## 2.6. PAL Colour

1. **Receive the PAL B/G studio colour bar pattern and adjust local frequency at the best tuned position.**
2. **Pic Menu: Dynamic Normal, Confirm Contrast - 100 DAC, Sub Contrast - 21 dac.**
3. **Channel colour set --------- STD**
4. **“CHK2” and press digit key “5” (AKB OFF) also confirm OSD become blue colour.**
5. **Set (A) to 0.3 ± 0.1V by BRT (CHK2) at measurement point TPL 2 Fig. 4.**

## 2.7. Adjustment

1. **Connect oscilloscope probe to TPL 7 (G OUT) with 10k series resistor and adjust Contrast so that (B) as in Fig. 4 is 1.85 ± 0.2V.**
2. **Adjust “Sub Colour” so that waveform as in Fig. 4 (1) 2.5 ± 0.1V.**
3. **Connect oscilloscope probe to TPL 1 (R OUT) with 10k series resistor and confirm waveform as in Fig. 5 is (2) 2.7 ± 0.4V.**

4. **Press digit key “5” (AKB ON) and confirm the OSD become white colour.**

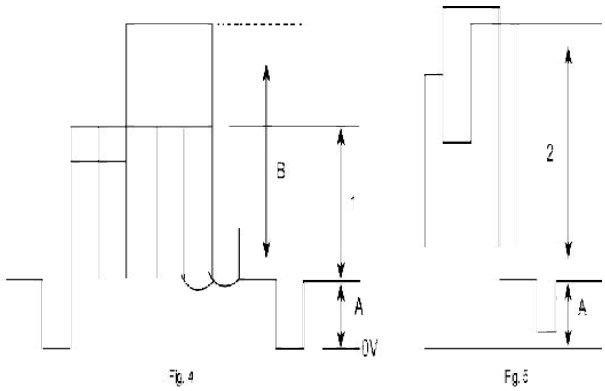


**Before Colour Purity, Convergence and White Balance adjustment are attempted,**
**V. Height, H. Centre and Focus adjustments must be completed.**

**Colour Purity**

1. **Set the Brightness and Contrast controls to their maximum positions.**
2. **Operate the TV set for 60 minutes.**
3. **Fully degausse the picture tube by using an external degaussing coil.**
4. **Apply a crosshatch pattern signal and adjust the static convergence magnets to the approximately correct position.**
5. **Receive a black and white signal.**
6. **Set the control as follows: / Red.....minimum / Green.....minimum / Blue.....minimum / Press the Shipping button on the remote control twice to select CRT Adjustment Mode to select low light.**
7. **Loosen the clamp screw for the Deflection Yoke A in Fig. 10 and move the Deflection Yoke as close to the purity magnet as possible.**
8. **Adjust the purity magnetic rings so that a vertical green field is obtained at the centre of the screen.**

**Fig. 6**

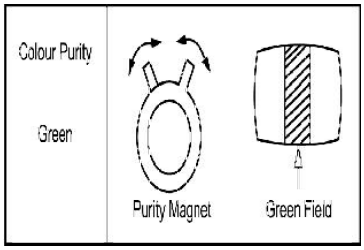


9. **Slowly push the Deflection Yoke and set it where a uniform green field is obtained.**

**Fig. 21**

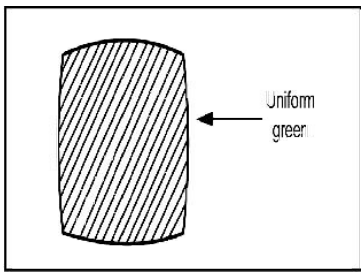


10. **Re-adjust the Low Light controls to their correct settings and make sure that a uniform white field is obtained.**
11. **Tighten the clamp screw A in Fig. 10.**

**Convergence**

1. **Apply a crosshatch pattern signal and Normalize Contrast control to the maximum positions.**
2. **Adjust Brightness until the grey position of the crosshatch pattern just becomes black.**
3. **Adjust the Red and Blue line at the centre of the screen by rotating the R-B static.**

**Fig. 8**

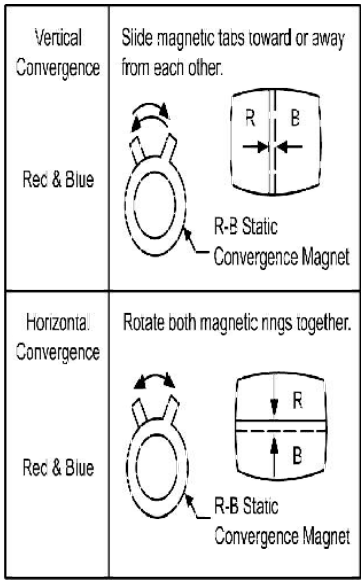


4. **Adjust Red and Blue with Green line at centre of the screen by rotating (RB)-G static convergence magnetic rings.**
5. **Lock convergence magnets with silicone sealer.**
6. **Remove the DY wedges and slightly tilt the Deflection Yoke vertically and horizontally to obtain the good overall convergence.**

**Fig. 9**

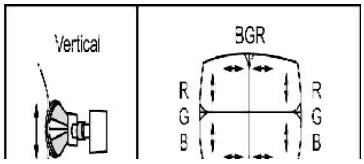


7. **Fix the Deflection Yoke by reinserting the DY wedges. Refer to Fig. 10.**
8. **If purity error is found, repeat "Colour Purity" adjustment.**

**Adjustment of CRT VRS**

1. **Preparation**
   - **A. Set DY to CRT not to tilt up and down left and right deflection.**
   - **B. Set CY to CRT and set CY magnet primarily (Fig. 1)**
     **Purity magnet : Set purity magnet that 2 magnets are (TOP POSITION)**
     **VRS magnet : Set purity magnet 2 magnets are (HORIZONTAL POSITION)**

## 2. Adjustment

A. Receive that Cross Hatch pattern.

B. Adjust V-SHIFT -50Hz.

C. Set 2 magnets of horizontal position to up and down equally so that it will be the center part of CRT. (Fig. 2)

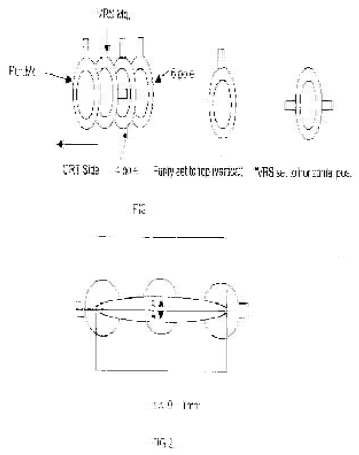

Fig. 10

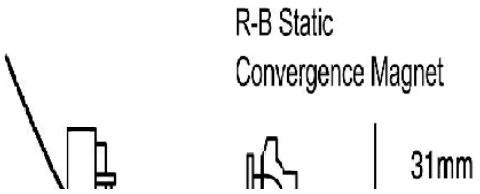


Fig. 11

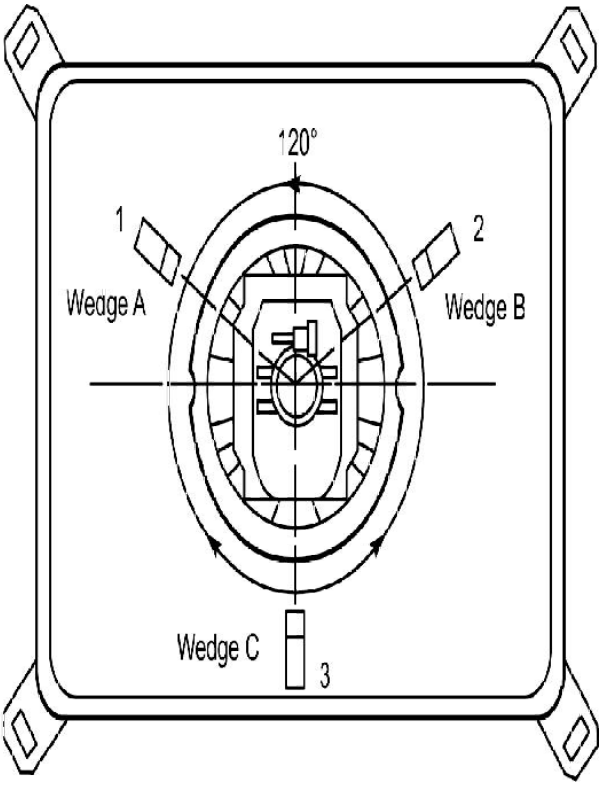


**Notes:**

1. **Wedge A, B and C should be inserted following the sequence of 1, 2 and 3 shown in Fig. 11.**
2. **The wedges should be set 120° apart from each other.**
3. **Be certain that three wedges are firmly fixed and the Deflection Yoke is tightly clamped in place. / Otherwise the Deflection Yoke may shift its position and cause a loss of convergence and purity.**

# 3. Conductor Views

# 4. Schematic Diagram

## Important Safety Notice

Components identified by ⚠ mark have special characteristics important for safety. When replacing any of these components, use only manufacturer's specified parts.

## Notes :

1. Resistor

   All resistors are carbon 1/4W resistors unless marked as follows :

   Unit of resistance is OHM ( Ω ) (K = 1 000 M = 1 000 000)

| | | | |
|---|---|---|---|
| | Nonflammable | | Metal Oxide |
| | Solid | | Metal Film |
| | Wire Wound | | Fuse |

2. Capacitor

   All capacitors are ceramic 50V capacitors unless marked as follows :

   Unit of capacitance is μF unless otherwise noted.

| | | | |
|---|---|---|---|
| | Temperature Compensation | | Electrolytic |
| | Polyester | | Bipolar |
| | Metalized Polyester | | Dipped Tantalum |
| | Polypropylene | | Z-Type |

6. Voltage Measurement

Voltage is measured using DC voltmeter.

Conditions of the measurement are the following :

Power Source..... AC AUTO 110-240V, 50/60Hz

Receiving Signal.....Colour Bar signal (RF)

All customer's controls.....Maximum positions

7. Number in red circle indicates waveform number.

(See waveform pattern table.)

8. When arrow mark ( ) is found, connection is easily found from the direction of arrow.

9. → : Indicates the major signal flow.

10. This schematic diagram is the latest at the time of printing and subject to change without notice.

**Remarks :**

The Power Circuit contains a circuit area which uses a seperate power supply to isolate the earth connection.

The circuit is defined by HOT and COLD indications in the schematic diagram.

Take the following precautions :

All circuits, except the Power Circuit are cold.

Precautions :

a. Do not touch the hot part or the hot and cold parts at the same time or you may be shocked.

b. Do not short-circuit the hot and cold circuits or a fuse may blow and parts may break.

c. Do not connect an instrument such as an oscilloscope to the hot and cold circuits simultaneously or a fuse may be blown.
Connect the earth of instruments to the earth connection of the circuit being measured.

d. Make sure to disconnect the power plug before removing the chassis

# 4.1. D Board

## 4.1.1. D Board (1/6)

## 4.1.2. D Board (2/6)

## 4.1.3. D Board (3/6)

## 4.1.4. D Board (4/6)

## 4.1.5. D Board (5/6)

## 4.1.6. D Board (6/6)

# 4.2. A Board

## 4.2.1. A Board (1/5)

## 4.2.2. A Board (2/5)

## 4.2.3. A Board (3/5)

#### 4.2.4. A Board (4/5)

#### 4.2.5. A Board (5/5)

### 4.3. L Board

#### 4.3.1. L Board (1/4)

#### 4.3.2. L Board (2/4)

#### 4.3.3. L Board (3/4)

#### 4.3.4. L Board (4/4)

### 4.4. G Board

#### 4.4.1. G Board (1/3)

#### 4.4.2. G Board (2/3)

#### 4.4.3. G Board (3/3)

## 5. Parts Locations

PARTS LOCATION

Note: The number on mechanical parts indicates Ref. No. of Replacement Parts List.

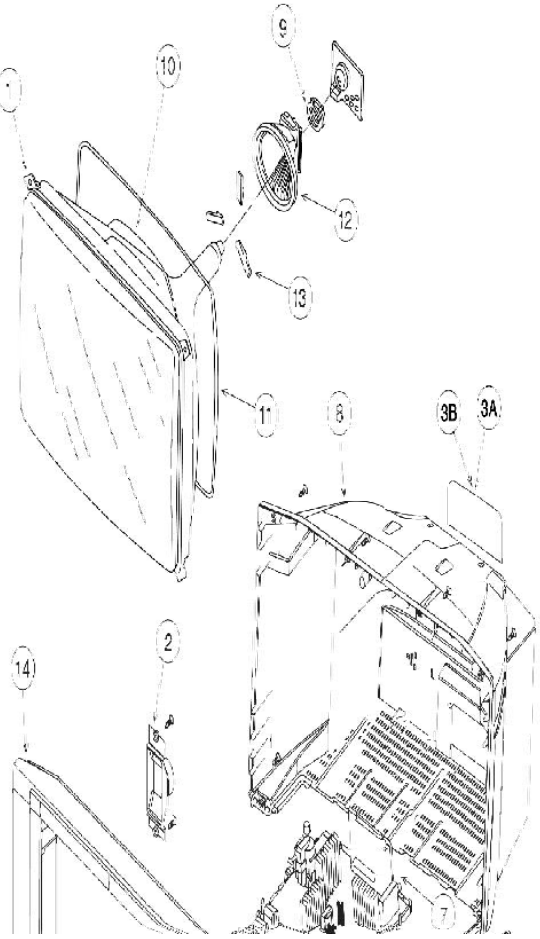


# 6. Replacement Parts List

**Important Safety Notice**

Components identified by ⚠ mark have special characteristics important for safety. When replacing any of these components, use manufacturer's specified parts.

Note: Printed circuit board assembly with "N_A" is no longer available after production discontinuation of the complete set.

**Abbreviation of part name and description**

**1. Resistor**

Example:

ERD25TJ104 **C** 100KΩ, J, 1/4W

Type Allowance

| Type | Allowance |
|---|---|
| C : Carbon | F : ± 1% |
| F : Fuse | G : ± 2% |
| M : Metal Oxide<br>Metal Film | J : ± 5%<br>K : ± 10% |
| S : Solid | M : ± 20% |
| W : Wire Wound | |

**2. Capacitor**

Example:

ECKF1H103Z= **C** 0.01μF, **Z**, 50V

Type Allowance

| Type | Allowance |
|---|---|
| C : Carbon | C : ± 0.25pF |
| E : Electrolytic | D : ± 0.5pF |
| F : Polyester<br>Polypropylene | F : ± 1pF<br>G : ± 3% |
| T : Tantalum | J : ± 5% |
| | K : ± 10% |
| | L : ± 15% |
| | M : ± 20% |
| | P : ± 100%, -0% |
| | Z : ± 80%, -20% |

## 6.1. Replacement Parts List

| Ref. No. | Part No. | Part Name & Description | Remarks |
|---|---|---|---|
| 1 | A68LZU185X-E | PICTURE TUBE | |
| 2 | EAS15S17A | SPEAKER | |
| | J0KG00000114 | CORE CLAMPER | |
| | N2QAJB000160 | REMOTE CONTROL | |
| 3A | TBM4G1310 | MODEL NAME PLATE | |
| | | (M'EAST ONLY ) | |
| 3B | TBM4G1311 | MODEL NAME PLATE | |
| | | ( KUWAIT,SAUDI ONLY ) | |
| 4 | TBM4G3017 | PANASONIC BADGE | |
| 5 | TBX4G91111 | POWER BUTTON | |
| | TES4G214 | SPRING (POWER BUTTON) | |
| | TES4G406 | COIL SPRING | |
| | TES4G409-1 | SPRING (DOOR) | |
| | THT4G1011J | SCREW (SPEAKER) | |
| | THT4G10139 | SCREW | |
| | TJB1726400 | 75OHM ADAPTOR | |
| | TJS4G8160 | AC PLUG ADAPTOR | |
| | | ( KUWAIT,SAUDI ONLY ) | |
| 6 | TKP4G13461 | DOOR | |
| 7 | TKP4G13481-2 | REAR AV BRACKET | |
| 8 | TKU4GA1141 | BACK COVER | |
| 9 | TLCA005 | CONVERGENCE YOKE | |
| 10 | TLK4G9083X | ROTATION COIL | |

| Ref. No. | Part No. | Part Name & Description | Remarks |
|---|---|---|---|
| 11 | TLK4G9098X | DEGAUSSING COIL | |
| 12 | TLY4G346T | DEFLECTION YOKE | |
| 13 | TMM4G503 | RUBBER WEDGE | |
| | TMM4G902-3 | RUBBER WASHER | |
| NLA | TNP4G375ABA | A BOARD | |
| NLA | TNP4G376AB | D BOARD | |
| NLA | TNP4G377AA | G BOARD | |
| NLA | TNP4G378AE | L BOARD | |
| | TPE4G14038 | SET COVER | |
| | TQB4G3972 | FAN BAG | |
| | | (M'EAST ONLY ) | |
| | TQB4G3971 | FAN BAG | |
| | | ( KUWAIT,SAUDI ONLY ) | |
| | TSMA011 | MAGNET | |
| | TSN63115-4 | PURITY MAGNET | |
| | TSX4G190L-1 | AC POWER CORD | |
| 14 | TXFKY01DG09 | CABINET ASSY | |
| | TXFPC01DG09 | CARTON | |
| | TXFPD01DG09 | CUSHION (TOP) | |
| | TXFPD02DG09 | CUSHION (BOTTOM) | |
| | CAPACITORS | | |
| C1001 | F1J1H103A590 | C 0.01UF, 50V | |
| C102 | ECA0JM471B | E 470UF, 6.3V | |
| C1050 | F2A1C101A310 | E 100UF, 100V | |
| C1051 | ECUX1H104KBX | C 0.1UF, K, 50V | |
| C1052 | ECJ2FB1E105K | C 1UF, K, 25V | |
| C1054 | ECJ4YB0J476M | C 47UF, M, 6.3V | |
| C1055 | ECJ4YB0J476M | C 47UF, M, 6.3V | |
| C1056 | ECJ2VC1H270J | C 27PF, J, 50V | |
| C1059 | F2A1C102A317 | E 1000UF, 16V | |
| C109 | F1J1H102A590 | C 1000PF, 50V | |
| C110 | F1J1H103A590 | C 1000PF, 50V | |
| C1102 | ECJ2VF1E104Z | C 0.1UF, Z, 25V | |
| C1103 | ECEA1HKAR47 | E 0.47UF, 50V | |
| C1104 | ECEA1HKAR47 | E 0.47UF, 50V | |
| C1105 | ECEA1HKAR47 | E 0.47UF, 50V | |
| C1106 | ECEA1HKAR47 | E 0.47UF, 50V | |
| C1107 | ECEA1HKAR47 | E 0.47UF, 50V | |
| C1108 | ECEA1HKAR47 | E 0.47UF, 50V | |
| C1109 | ECEA1HKAR47 | E 0.47UF, 50V | |
| C111 | F2A1HR330016 | E 0.33UF, 50V | |
| C1110 | ECEA1HKAR47 | E 0.47UF, 50V | |
| C1115 | F2A1H3R3A317 | E 3.3UF, 50V | |
| C1116 | ECJ2VF1C104Z | C 0.1UF, Z, 16V | |
| C112 | ECJ2VC1H330J | C 33PF, J, 50V | |
| C1120 | F2A1C1000079 | E 10UF, 16V | |
| C1121 | ECJ2VF1E104Z | C 0.1UF, Z, 25V | |
| C1122 | ECJ2VF1H104Z | C 0.1UF, Z, 50V | |
| C1125 | ECJ2VF1C104Z | C 0.1UF, Z, 16V | |
| C1126 | ECJ2VC1H560J | C 56PF, J, 50V | |
| C1127 | ECJ1VC1H560J | C 56PF, J, 50V | |
| C113 | ECJ2VC1H330J | C 33PF, J, 50V | |
| C1130 | ECJ2VF1E104Z | C 0.1UF, Z, 25V | |
| C1131 | ECJ2VF1E104Z | C 0.1UF, Z, 25V | |

| Ref. No. | Part No. | Part Name & Description | Remarks |
|---|---|---|---|
| C1132 | ECJ2VF1E104Z | C 0.1UF, Z, 25V | |
| C1133 | F2A1C1000079 | C 10UF, J, 16V | |
| C1134 | F2A1C101A310 | E 100UF, 16V | |
| C1135 | ECJ2VF1E104Z | C 0.1UF, Z, 25V | |
| C1136 | ECJ2VF1E104Z | C 0.1UF, Z, 25V | |
| C1140 | ECJ2VF1E104Z | C 0.1UF, Z, 25V | |
| C1141 | ECJ2VF1E104Z | C 0.1UF, Z, 25V | |
| C1142 | ECJ2VF1E104Z | C 0.1UF, Z, 25V | |
| C1143 | ECJ2VF1E104Z | C 0.1UF, Z, 25V | |
| C1144 | ECJ1VC1H101J | C 100PF, J, 50V | |
| C1145 | ECUX1H220JCX | C 22PF, J, 50V | |
| C1146 | ECUX1H220JCX | C 22PF, J, 50V | |
| C1150 | F2A1C1000079 | E 10UF, 16V | |
| C1156 | ECJ2VF1E104Z | C 0.1UF, Z, 25V | |
| C117 | F1J1H103A590 | E 10UF, 16V | |
| C1179 | ECJ2VF1E104Z | C 0.1UF, Z, 25V | |
| C118 | ECJ2VF1H104Z | C 0.1UF, Z, 50V | |
| C1180 | ECJ2VF1E104Z | C 0.1UF, Z, 25V | |
| C1181 | EEUFC1C221B | E 220UF, 16V | |
| C1182 | ECJ2VF1E104Z | C 0.1UF, Z, 25V | |
| C1183 | F2A1C101A310 | E 100UF, 16V | |
| C1184 | F2A1C1000079 | E 10UF, 16V | |
| C1185 | ECJ2VF1E104Z | C 0.1UF, Z, 25V | |
| C119 | F2A1C221A338 | E 220UF, 16V | |
| C1201 | ECJ2VC1H200J | C 20PF, J, 50V | |
| C1202 | ECJ2VC1H180J | C 18PF, J, 50V | |
| C1203 | F1J1H104A578 | E 100UF, 100V | |
| C1204 | F2A1C101A310 | E 100UF, 100V | |
| C1205 | F1J1H104A578 | C 0.1UF, 50V | |
| C1206 | F2A1C101A310 | E 100UF, 100V | |
| C1208 | ECJ2VF1H104Z | C 0.1UF, Z, 50V | |
| C1210 | ECJ2VF1C104Z | C 0.1UF, Z, 16V | |
| C1212 | F2A1C101A310 | E 100UF, 100V | |
| C1213 | ECJ2VF1H104Z | C 0.1UF, Z, 50V | |
| C1215 | F1J1H104A578 | C 0.1UF, 50V | |
| C1216 | F2A1C101A310 | E 100UF, 100V | |
| C1218 | F2A1C221A338 | E 220UF, 16V | |
| C122 | ECJ2FB1H104K | C 0.1UF, K, 50V | |
| C1220 | ECUX1H101JCX | C 100PF, J, 50V | |
| C1221 | F1J1H104A578 | C 0.1UF, 50V | |
| C1222 | F2A1C101A310 | E 100UF, 100V | |
| C1223 | F1J1H104A578 | C 0.1UF, 50V | |
| C1224 | F2A1C101A310 | E 100UF, 100V | |
| C1240 | ECJ1VF1H104Z | C 0.1UF, Z, 50V | |
| C1241 | F2A1C221A338 | E 220UF, 16V | |
| C1242 | ECEA1HN100U | E 10UF, 50V | |
| C1243 | ECEA1HN100U | E 10UF, 50V | |
| C1245 | ECJ2VF1E104Z | C 0.1UF, Z, 25V | |
| C125 | ECJ2VC1H331J | C 330PF, J, 50V | |
| C126 | ECJ2VC1H561J | C 560PF, J, 50V | |
| C1261 | ECJ2VF1H104Z | C 0.1UF, Z, 50V | |
| C1262 | ECJ2VF1E104Z | C 0.1UF, Z, 25V | |
| C1263 | F2A1C101A310 | E 100UF, 100V | |
| C1264 | ECJ2VF1E104Z | C 0.1UF, Z, 25V | |
| C1265 | F2A1C101A310 | E 100UF, 100V | |
| C1266 | ECJ2VF1E104Z | C 0.1UF, Z, 25V | |
| C1267 | F2A1C101A310 | E 100UF, 100V | |

| | | | |
|---|---|---|---|
| [illegible] | [illegible] | [illegible] | |

| Ref. No. | Part No. | Part Name & Description | Remarks |
|---|---|---|---|
| C1268 | ECJ1VB1C104K | C 0.1UF, K, 16V | |
| C1269 | F2A1A221A271 | E 220UF, 10V | |
| C130 | F1J1H103A590 | C 0.01UF, 50V | |
| C131 | F1J1C104A074 | C 0.1UF, 16V | |
| C137 | ECJ2VC1H560K | C 56PF, K, 50V | |
| C138 | ECJ2VC1H560K | C 56PF, K, 50V | |
| C140 | ECJ2VF1H104Z | C 0.1UF, Z, 50V | |
| C141 | F1J1H104A578 | C 0.1UF, 50V | |
| C142 | F2A1C101A310 | E 100UF, 100V | |
| C1501 | ECJ1VB1C104K | C 0.1UF, K, 16V | |
| C1502 | ECJ1VB1C104K | C 0.1UF, K, 16V | |
| C1503 | ECJ1VB1C104K | C 0.1UF, K, 16V | |
| C1505 | ECJ1VB1C104K | C 0.1UF, K, 16V | |
| C1506 | ECJ1VB1C104K | C 0.1UF, K, 16V | |
| C1507 | ECJ1VB1C104K | C 0.1UF, K, 16V | |
| C1508 | ECJ2VF1C104Z | C 0.1UF, Z, 16V | |
| C1509 | ECJ2VF1C104Z | C 0.1UF, Z, 16V | |
| C1510 | ECJ2VF1C104Z | C 0.1UF, Z, 16V | |
| C1511 | ECJ1VB1C104K | C 0.1UF, K, 16V | |
| C1512 | ECJ1VB1C104K | C 0.1UF, K, 16V | |
| C1513 | ECJ1VB1C104K | C 0.1UF, K, 16V | |
| C1514 | ECJ2VF1E104Z | C 0.1UF, Z, 25V | |
| C1520 | ECJ2VF1C104Z | C 0.1UF, Z, 16V | |
| C1521 | ECJ1VB1C104K | C 0.1UF, K, 16V | |
| C1522 | ECJ1VB1C104K | C 0.1UF, K, 16V | |
| C1523 | ECJ2VF1C104Z | C 0.1UF, Z, 16V | |
| C1524 | ECJ1VB1C104K | C 0.1UF, K, 16V | |
| C1530 | ECJ2VF1E104Z | C 0.1UF, Z, 25V | |
| C1531 | F2A1C101A310 | E 100UF, 16V | |
| C1532 | ECJ2VF1E104Z | C 0.1UF, Z, 25V | |
| C1533 | F2A1C101A310 | E 100UF, 16V | |
| C1561 | ECEA1CKA470 | E 47UF, 16V | |
| C1562 | ECJ2VF1E104Z | C 0.1UF, Z, 25V | |
| C1563 | ECEA1AKS221 | E 220UF, 10V | |
| C1564 | ECEA1AKS221 | E 220UF, 10V | |
| C1565 | ECEA1AN470U | E 47UF, 10V | |
| C1701 | ECJ2VC1H240J | C 24PF, J , 50V | |
| C1702 | ECJ2VC1H240J | C 24PF, J , 50V | |
| C1703 | ECJ2VF1E104Z | C 0.1UF, Z, 25V | |
| C1705 | F1J1H222A590 | C 2200PF, 50V | |
| C1706 | F2A1C1000079 | E 10UF, 16V | |
| C1709 | F1J1H103A590 | C 0.01UF, 50V | |
| C1710 | F1J1H333A021 | C 0.033UF, 50V | |
| C1711 | F1J1H682A021 | C 6800PF, 50V | |
| C1713 | ECEA1CKA100 | E 10UF, 16V | |
| C1714 | ECJ2VF1E104Z | C 0.1UF, Z, 25V | |
| C1716 | ECJ2VF1E104Z | C 0.1UF, Z, 25V | |
| C1722 | F1H1H103A013 | C 0.01UF, 50V | |
| C1723 | ECJ1VC1H121J | C 120PF, J, 50V | |
| C1724 | F1J1H222A590 | C 0.01UF, 50V | |
| C1725 | ECEA1CKA100 | E 10UF, 16V | |
| C1726 | ECJ2VF1E104Z | C 0.1UF, Z, 25V | |
| C1728 | ECJ2VF1C105Z | C 1UF, Z, 16V | |
| C1729 | F1J1H102A590 | C 1000PF, 50V | |
| C1731 | ECJ2VF1E104Z | C 0.1UF, Z, 25V | |
| C1732 | ECJ2VF1E104Z | C 0.1UF, Z, 25V | |
| C1733 | ECJ2VF1E104Z | C 0.1UF, Z, 25V | |

| | | | |
|---|---|---|---|
| [illegible] | [illegible] | [illegible] | |

| Ref. No. | Part No. | Part Name & Description | Remarks |
|---|---|---|---|
| C1734 | ECJ1VC1H101J | C 100PF, J, 50V | |
| C1735 | ECJ1VC1H101J | C 100PF, J, 50V | |
| C1736 | ECJ1VC1H101J | C 100PF, J, 50V | |
| C1737 | F1H1C224A068 | C 0.22UF, 16V | |
| C1738 | F2A1C1000079 | E 10UF, 16V | |
| C1739 | F2A1C101A310 | E 100UF, 100V | |
| C1740 | ECJ2VF1E104Z | C 0.1UF, Z, 25V | |
| C1743 | F2A1H3R3A317 | E 3.3UF, 50V | |
| C1744 | ECJ2VF1E104Z | C 0.1UF, Z, 25V | |
| C1745 | F2A0J221A317 | E 220UF, 6.3V | |
| C1746 | F1H1H103A013 | C 0.01UF, 50V | |
| C1747 | F1H1H103A013 | C 0.01UF, 50V | |
| C1748 | F1H1H103A013 | C 0.01UF, 50V | |
| C1749 | F1H1H103A013 | C 0.01UF, 50V | |
| C1752 | F1H1H471A013 | C 470PF, 50V | |
| C1753 | ECJ2VF1E104Z | C 0.1UF, Z, 25V | |
| C1754 | F2A1A221A271 | E 220UF, 10V | |
| C1755 | F2A1A221A271 | E 220UF, 10V | |
| C2009 | F1J1H332A021 | C 3300PF, 50V | |
| C2010 | F1J1H332A021 | C 3300PF, 50V | |
| C2011 | F1J1H102A590 | C 1000PF, 50V | |
| C2129 | F2A1C102A317 | E 1000UF, 16V | |
| C2131 | F2A1C101A310 | E 100UF, 100V | |
| C2201 | ECJ2VC1H102J | C 1000PF, J, 50V | |
| C2202 | ECJ2VC1H102J | C 1000PF, J, 50V | |
| C2210 | F2A1C1000079 | E 10UF, 16V | |
| C2211 | F2A1C1000079 | E 10UF, 16V | |
| C2212 | ECJ2VF1C105Z | C 1UF, Z, 16V | |
| C2213 | F2A1C470A310 | E 47UF, 16V | |
| C2214 | F2A1C470A310 | E 47UF, 16V | |
| C2303 | ECEA1CKA220 | E 22UF, 16V | |
| C2314 | F2A1E470A270 | E 47UF, 25V | |
| C2315 | F2A1E222A284 | E 2200UF, 25V | |
| C2320 | ECJ2VC1H102J | C 1000PF, J, 50V | |
| C2321 | ECJ2VC1H102J | C 1000PF, J, 50V | |
| C2322 | ECJ2VC1H102J | C 1000PF, J, 50V | |
| C2323 | ECJ2VC1H102J | C 1000PF, J, 50V | |
| C2350 | F1J1H104A578 | C 0.1UF, 50V | |
| C2351 | F1J1H104A578 | C 0.1UF, 50V | |
| C2352 | F1J1H104A578 | C 0.1UF, 50V | |
| C2353 | F1J1H104A578 | C 0.1UF, 50V | |
| C2360 | ECA1CM101B | E 100UF, 16V | |
| C2369 | ECA1CM101B | E 100UF, 16V | |
| C253 | ECEA1HN2R2U | E 2.2UF, 50V | |
| C257 | ECEA1HN2R2U | E 2.2UF, 50V | |
| C3101 | ECJ2VC1H561K | C 560PF, K, 50V | |
| C3102 | ECJ2VC1H561K | C 560PF, K, 50V | |
| C3121 | ECJ2VC1H561K | C 560PF, K, 50V | |
| C3122 | ECJ2VC1H561K | C 560PF, K, 50V | |
| C3141 | ECJ2VC1H561K | C 560PF, K, 50V | |
| C3142 | ECJ2VC1H561K | C 560PF, K, 50V | |
| C3203 | ECJ2VC1H561J | C 560PF, J, 50V | |
| C3204 | ECJ2VC1H561J | C 560PF, J, 50V | |
| C3205 | ECA1CM101B | E 100UF, 16V | |
| C3206 | ECA1CM101B | E 100UF, 16V | |
| C3210 | F1J1H103A590 | C 0.01UF, 50V | |
| C3215 | F2A1H470A343 | E 47UF, 50V | |

| | | | |
|---|---|---|---|
| [illegible] | [illegible] | [illegible] | |

| Ref. No. | Part No. | Part Name & Description | Remarks |
|---|---|---|---|
| C3216 | F2A1H470A343 | E 47UF, 50V | |
| C351 | ECJ2VC1H120J | C 12PF, J, 50V | |
| C352 | ECJ2VF1H104Z | C 0.1UF, Z, 50V | |
| C353 | ECUX1H104KBX | C 0.1UF, K, 50V | |
| C354 | ECQE2104KF | P 0.1UF, K,250V | |
| C355 | F1B2H102A022 | C 1000PF, 500V | |
| C358 | ECJ2VF1H104Z | C 0.1UF, Z, 50V | |
| C360 | ECJ2VF1E104Z | C 0.1UF, Z, 25V | |
| C361 | ECJ2VC1H120J | C 12PF, J, 50V | |
| C362 | ECJ2VF1H104Z | C 0.1UF, Z, 50V | |
| C363 | ECUX1H104KBX | C 0.1UF, K, 50V | |
| C364 | ECQE2104KF | P 0.1UF, K,250V | |
| C365 | F1B2H102A022 | C 1000PF, 500V | |
| C366 | F2A1C101A310 | E 100UF, 16V | |
| C368 | F2A1C471A339 | E 470UF, 16V | |
| C371 | ECJ2VC1H120J | C 12PF, J, 50V | |
| C372 | ECJ2VF1H104Z | C 0.1UF, Z, 50V | |
| C373 | ECUX1H104KBX | C 0.1UF, K, 50V | |
| C374 | ECQE2104KF | P 0.1UF, K,250V | |
| C375 | F1B2H102A022 | C 1000PF, 500V | |
| C382 | F2A1H100A317 | E 10UF, 50V | |
| C383 | F1B1H101A130 | C 100PF, 50V | |
| C385 | F2A2E1000023 | E 10UF, 250V | |
| C386 | ECKW3D152JBR | C 1500PF, J, 2KV | |
| C401 | ECJ2VC1H030C | C 3PF, C, 50V | |
| C451 | F1J1H102A590 | C 1000PF, 50V | |
| C453 | ECJ2FB1H104K | C 0.1UF, K, 50V | |
| C454 | ECJ2FB1H104K | C 0.1UF, K, 50V | |
| C456 | F2A1V2210052 | E 220UF, 35V | |
| C459 | ECQB1224KF | P 0.22UF, K,100V | |
| C463 | F2A1V2210052 | E 220UF, 35V | |
| C4817 | F2A1C471A339 | E 470UF, 16V | |
| C4818 | F2A1C101A310 | E 100UF, 100V | |
| C4820 | ECUX1H101JCX | C 100PF, J, 50V | |
| C501 | F2A1E101A273 | E 100UF, 25V | |
| C502 | F2A1C1000079 | E 10UF, 16V | |
| C508 | ECJ2VF1H224Z | C 0.22UF, Z, 50V | |
| C509 | F2A1H470A343 | E 47UF, 50V | |
| C510 | F2A1H100A317 | E 10UF, 50V | |
| C541 | ECKR3A151KBP | C 150PF, K, 1KV | |
| C542 | ECJ1VC1H270J | C 27PF, J, 50V | |
| C551 | ECKW3D221JBR | C 220PF, J, 2KV | |
| C552 | ECWH20102JVY | P 1000PF,J, 2KV | |
| C558 | F2A1V471A141 | E 470UF, 35V | |
| C560 | ECQV1393JM | P 0.039UF,J, 100V | |
| C561 | F2A1E471A299 | E 470UF, 25V | |
| C563 | F2A2E1000023 | E 10UF, 250V | |
| C564 | ECEA2AN2R2S | E 2.2UF, 100V | |
| C565 | ECQB1H273JF | P 0.027UF, J, 50V | |
| C566 | F1B2H331A025 | C 330PF, 500V | |
| C567 | F2A1E471A299 | E 470UF, 25V | |
| C568 | F1B2H331A025 | C 330PF, 500V | |
| C570 | F2A1C101A310 | E 100UF, 100V | |
| C573 | ECJ2VC2A221J | C 220PF, J, 100V | |
| C574 | ECJ2VC2A221J | C 220PF, J, 100V | |
| C581 | F0C2E684A040 | P 0.68UF, 250V | |
| C582 | F0C2E684A040 | P 0.68UF, 250V | |

| | | | |
|---|---|---|---|
| [illegible] | [illegible] | [illegible] | |

| Ref. No. | Part No. | Part Name & Description | Remarks |
|---|---|---|---|
| C583 | ECWH20113JVB | P 0.011UF, 2kV | |
| C584 | ECKW3D152KBP | C 1500PF, K, 2KV | |
| C587 | ECQF4333JZ | P 0.033UF, J,400V | |
| C588 | F0C2E334A039 | P 0.33UF, 250V | |
| C701 | F1B2H471A025 | C 470PF, 500V | |
| C702 | ECQE2334KF | P 0.33UF, K,250V | |
| C703 | ECQE1475KF | P 4.7UF, K,100V | |
| C704 | ECQE1335KF | P 3.3UF, K,100V | |
| C801 | F0CAF2240003 | CAP 250VAC 0.22UF | |
| C802 | F0CAF2240003 | CAP 250VAC 0.22UF | |
| C806 | ECKWAE472ZED | C 4700PF, Z,500V | |
| C807 | ECKWAE472ZED | C 4700PF, Z,500V | |
| C808 | ECKWAE472ZED | C 4700PF, Z,500V | |
| C809 | ECKWAE472ZED | C 4700PF, Z,500V | |
| C812 | F1B1H103A013 | C 0.01UF, 50V | |
| C813 | F2A1C221A338 | E 220UF, 16V | |
| C814 | ECKCNA472ME7 | C 4700PF, M, | |
| C815 | ECKCNA152ME7 | C 1500PF, M, | |
| C818 | F1A2E331A002 | C 3300PF, | |
| C830 | F2B2G4710007 | E 470UF, 400V | |
| C831 | ECQM4473JZ | P 0.047UF, J,400V | |
| C832 | ECKW3D151KBR | C 150PF, K, 2KV | |
| C833 | F2A1V100A243 | E 10UF, 35V | |
| C834 | ECKW3D102KBP | C 1000PF, K, 2KV | |
| C835 | ECQB1H471JF | P 470PF, J, 50V | |
| C836 | ECQB1H221KF | P 220PF, K, 50V | |
| C837 | F2A1H1R0A317 | E 1UF, 50V | |
| C838 | ECQB1H103JF | P 0.01UF, 50V | |
| C839 | ECQB1H683JF | P 0.068UF, J, 50V | |
| C840 | ECKCNA222ME7 | C 2200PF, M, | |
| C849 | F2A1H1R0A317 | E 1UF, 50V | |
| C851 | F1B2H471A025 | C 470PF, 500V | |
| C852 | F1B2H471A025 | C 470PF, 500V | |
| C855 | F2B2C4710007 | E 470UF, 160V | |
| C856 | F2A1C682A260 | E 6800UF, 16V | |
| C857 | F2A1C392A258 | E 3900UF, 16V | |
| C858 | F2A1E222A284 | E 2200UF, 25V | |
| C863 | ECKW3D471KBP | C 470PF, K, 2KV | |
| C870 | F2A2C1010018 | E 100UF, 160V | |
| C871 | ECJ2FB1H104K | C 0.1UF, K, 50V | |
| C872 | F2A1C101A310 | E 100UF, 16V | |
| C873 | ECJ2FB1H104K | C 0.1UF, K, 50V | |
| C874 | ECJ2VF1C105Z | C 1UF, Z, 16V | |
| C875 | F2A1C101A310 | E 100UF, 16V | |
| C876 | EEUFC1A101B | E 100UF, 10V | |
| C877 | F1J1C104A074 | C 0.1UF, 16V | |
| C878 | F1J1C103A074 | C 0.1UF, 16V | |
| C879 | ECJ2VF1C105Z | C 1UF, Z, 16V | |
| C880 | ECJ2FB1H104K | C 0.1UF, Z, 50V | |
| C881 | EEUFC1A471B | E 470UF, 10V | |
| C882 | ECJ2VF1C105Z | C 1UF, Z, 16V | |
| C883 | ECJ2VF1C105Z | C 1UF, Z, 16V | |
| C884 | F2A1A471A274 | E 470UF, 10V | |
| C885 | F2A1H330A342 | E 33UF, 50V | |
| C886 | EEUFC1A471B | E 470UF, 10V | |

| Ref. No. | Part No. | Part Name & Description | Remarks |
|---|---|---|---|
| C887 | F1J1C103A074 | C 0.01UF, 16V | |
| C888 | F1J1C104A074 | C 0.1UF, 16V | |
| C889 | ECJ2VF1C105Z | C 1UF, Z, 16V | |
| C890 | ECJ2VF1C105Z | C 1UF, Z, 16V | |
| C891 | EEUFC1C471B | E 470UF, 16V | |
| C893 | ECJ2VF1H104Z | C 0.1UF, Z, 50V | |
| C894 | ECQB1H153JF | P 0.015UF, J, 50V | |
| C901 | F2A1C101A310 | E 100UF, 16V | |
| C902 | ECJ2VF1H103Z | C 0.01UF, Z, 50V | |
| C904 | F1J1H472A590 | C 4700PF, 50V | |
| C905 | F2A2C2200010 | E 22UF, 160V | |
| C906 | F2A2C2200010 | E 22UF, 160V | |
| C907 | F2A2C2200010 | E 22UF, 160V | |
| C908 | ECQM4472JZ | P 4700PF, J,400V | |
| | DIODES | | |
| D1050 | B3AGA0000089 | DIODE | |
| D1051 | B0BA8R200028 | ZENER DIODE | |
| D1052 | B0BA5R700019 | ZENER DIODE | |
| D1059 | B0JAME000058 | DIODE | |
| D1120 | B0ACCK000012 | DIODE | |
| D1121 | MAZ80910HL | ZENER DIODE | |
| D1122 | MAZ80910HL | ZENER DIODE | |
| D1134 | MAZ80390HL | DIODE | |
| D1135 | MAZ80560ML | DIODE | |
| D1176 | MAZ80510LL | DIODE | |
| D1177 | MAZ80510LL | DIODE | |
| D1178 | MAZ80390HL | DIODE | |
| D1180 | MAZ80390HL | DIODE | |
| D1181 | MAZ802400L | DIODE | |
| D1182 | MAZ80560ML | DIODE | |
| D1201 | MAZ80390HL | DIODE | |
| D1240 | MAZ80390HL | DIODE | |
| D1241 | MAZ81200ML | DIODE | |
| D1242 | MAZ81200ML | DIODE | |
| D1243 | MAZ81200ML | DIODE | |
| D1270 | MAZ80390HL | DIODE | |
| D1271 | MAZ802400L | DIODE | |
| D140 | MAZ802400L | DIODE | |
| D1502 | MAZ80390HL | DIODE | |
| D1503 | MAZ80470LL | DIODE | |
| D1504 | MAZ80470LL | DIODE | |
| D1505 | MAZ80470LL | DIODE | |
| D1506 | MAZ80470LL | DIODE | |
| D1507 | MAZ80470LL | DIODE | |
| D1508 | MAZ80470LL | DIODE | |
| D1509 | MAZ80470LL | DIODE | |
| D1510 | MAZ802400L | DIODE | |
| D1511 | MAZ80470LL | DIODE | |
| D1512 | MAZ80470LL | DIODE | |
| D1513 | MAZ80470LL | DIODE | |
| D1514 | MAZ80470LL | DIODE | |
| D1515 | MAZ80470LL | DIODE | |
| D1516 | MAZ80470LL | DIODE | |
| D1546 | MAZ80510LL | DIODE | |
| D1547 | MAZ80510LL | DIODE | |
| D1548 | MAZ80390HL | DIODE | |
| D1570 | B0ACCK000012 | DIODE | |

| | | | |
|---|---|---|---|

| Ref. No. | Part No. | Part Name & Description | Remarks |
|---|---|---|---|
| D1702 | B0ADCJ000015 | DIODE | |
| D1707 | MAZ80390HL | DIODE | |
| D1708 | MAZ80560HL | DIODE | |
| D1711 | B0ACCK000012 | DIODE | |
| D1720 | MAZ80390HL | DIODE | |
| D1730 | MAZ80560ML | DIODE | |
| D1750 | B0ACCK000012 | DIODE | |
| D2103 | B0HAJL000003 | DIODE | |
| D2107 | B0AACK000004 | DIODE | |
| D2108 | B0AACK000004 | DIODE | |
| D3101 | MA3091LTX | ZENER DIODE | |
| D3201 | B0BA8R200028 | ZENER DIODE | |
| D3202 | B0BA8R200028 | ZENER DIODE | |
| D3205 | B0BA8R200028 | ZENER DIODE | |
| D3210 | B0BA9R100017 | ZENER DIODE | |
| D351 | B0ACCK000012 | DIODE | |
| D354 | B0ACCK000012 | DIODE | |
| D355 | B0AACK000004 | DIODE | |
| D361 | B0ACCK000012 | DIODE | |
| D371 | B0ACCK000012 | DIODE | |
| D454 | B0HAMP000090 | DIODE | |
| D455 | B0BA5R100048 | ZENER DIODE | |
| D458 | B0HAMP000090 | DIODE | |
| D501 | B0AACK000004 | DIODE | |
| D502 | B0HAMP000090 | DIODE | |
| D503 | B0AACK000004 | DIODE | |
| D504 | B0AACK000004 | DIODE | |
| D505 | B0BA9R900012 | ZENER DIODE | |
| D512 | MA4104J | DIODE | |
| D513 | MA171 | DIODE | |
| D541 | B0ADCJ000015 | DIODE | |
| D553 | B0HAMP000090 | DIODE | |
| D554 | B0HAMP000090 | DIODE | |
| D557 | B0HAML000019 | DIODE | |
| D558 | B0HAML000019 | DIODE | |
| D559 | B0AACK000004 | DIODE | |
| D560 | B0HANV000004 | DIODE | |
| D563 | B0HAMP000090 | DIODE | |
| D565 | B0HAMP000090 | DIODE | |
| D570 | MA165 | DIODE | |
| D571 | B0AACK000004 | DIODE | |
| D580 | B0HARV000007 | DIODE | |
| D581 | B0HANP000004 | DIODE | |
| D701 | B0BA01600030 | ZENER DIODE | |
| D707 | B0HAMP000090 | DIODE | |
| D801 | ERZV10V621CS | VARISTOR | |
| D802 | B0FBAT000014 | DIODE | |
| D806 | B2AAFR000002 | THYRISTOR | |
| D820 | B0AACK000004 | DIODE | |
| D830 | B0HAJL000003 | DIODE | |
| D832 | B0EAKT000018 | DIODE | |
| D833 | B0HAJL000003 | DIODE | |
| D834 | B0BA6R800025 | ZENER DIODE | |
| D835 | B0BA8R000010 | DIODE | |
| D840 | B0HAJL000003 | DIODE | |
| D841 | B0BA01700031 | ZENER DIODE | |

| Ref. No. | Part No. | Part Name & Description | Remarks |
|---|---|---|---|
| D842 | B0HAJL000003 | DIODE | |
| D843 | B0HAJL000003 | DIODE | |
| D844 | B0AACK000004 | DIODE | |
| D845 | B0AACK000004 | DIODE | |
| D846 | B0AACK000004 | DIODE | |
| D847 | B0AACK000004 | DIODE | |
| D848 | B0AACK000004 | DIODE | |
| D850 | B0HAPV000009 | DIODE | |
| D851 | B0GACN000002 | DIODE | |
| D852 | B0JAPG000029 | DIODE | |
| D853 | FMLG12S | DIODE | |
| D865 | B0HAJL000003 | DIODE | |
| D866 | B0BA9R100017 | ZENER DIODE | |
| D867 | B0HAJL000003 | DIODE | |
| D870 | B0BA3R600020 | ZENER DIODE | |
| D875 | MTZJ24A | ZENER DIODE | |
| D876 | B0AACK000004 | DIODE | |
| D877 | B0BA5R100048 | ZENER DIODE | |
| D878 | B0AACK000004 | DIODE | |
| D880 | B0AACK000004 | DIODE | |
| D881 | B0BA01500052 | DIODE | |
| D882 | B0BA01500052 | DIODE | |
| D883 | B0BA9R900012 | ZENER DIODE | |
| D884 | B0HAJL000003 | DIODE | |
| D885 | RK34LFC4 | DIODE | |
| D886 | RK34LFC4 | DIODE | |
| D889 | B0AACK000004 | DIODE | |
| D901 | SR2KNLFA1 | DIODE | |
| D903 | B0BA9R900012 | ZENER DIODE | |
| D904 | MAZ80510LL | DIODE | |
| D905 | MAZ80510LL | DIODE | |
| D906 | MAZ80510LL | DIODE | |
| | INTEDGRATED CIRCUITS | | |
| IC1101 | TVR4G23-8 | FLASH MEMORY IC | |
| IC1201 | C5AB00000022 | IC | |
| IC1202 | C1AB00001340 | IC | |
| IC1203 | TVR4GAS546 | EEPROM IC | |
| IC1207 | C0EBE0000388 | IC | |
| IC1260 | C0DBEZG00024 | IC, POWER SUPPLY | |
| IC140 | C0DBAFD00017 | IC, POWER SUPPLY | |
| IC1701 | C1AB00002396 | IC | |
| IC2301 | C1BA00000375 | IC | |
| IC351 | C1AA00000325 | IC | |
| IC361 | C1AA00000325 | IC | |
| IC371 | C1AA00000325 | IC | |
| IC451 | C1AA00000689 | IC | |
| IC4804 | AN15530B | IC | |
| IC830 | C5HABZZ00120 | IC, HYBRID | |
| IC862 | C0DBAZG00034 | IC, POWER SUPPLY | |
| IC863 | C0DBAZG00034 | IC, POWER SUPPLY | |
| IC870 | C0EAS0000024 | IC | |
| IC871 | C0DAEJG00001 | IC, POWER SUPPLY | |
| IC873 | C0DAEJG00001 | IC, POWER SUPPLY | |
| IC874 | C0DAEJG00001 | IC, POWER SUPPLY | |
| | COILS | | |
| L101 | J0JKA0000038 | BEAD CORE | |
| L103 | J0JKA0000038 | BEAD CORE | |

| | | | |
|---|---|---|---|
| [illegible] | [illegible] | [illegible] | |

| Ref. No. | Part No. | Part Name & Description | Remarks |
|---|---|---|---|
| L104 | J0JKB0000034 | EMI FILTER | |
| L1050 | G0C331KA0073 | PEAKING COIL | |
| L107 | G0C100KA0065 | PEAKING COIL | |
| L1110 | ELJFC4R7KFB | CHIP INDUCTOR | |
| L1130 | ELJFC4R7KFB | CHIP INDUCTOR | |
| L1134 | G0C180JA0021 | COIL | |
| L116 | TALV35VB6R8K | PEAKING COIL | |
| L1180 | J0JKB0000040 | COIL | |
| L1181 | G0C4R7JA0021 | COIL | |
| L1201 | TSK1045 | BEAD CORE | |
| L1202 | EXC3BB221H | CHIP BEAD CORE | |
| L1210 | TSK1045 | BEAD CORE | |
| L1211 | EXC3BB221H | CHIP BEAD CORE | |
| L1212 | TSK1045 | BEAD CORE | |
| L1220 | TSK1045 | BEAD CORE | |
| L1240 | G0C102JA0055 | COIL | |
| L1262 | G0C4R7JA0021 | COIL | |
| L1263 | EXCML20A390U | EMI FILTER | |
| L150 | J0JKA0000038 | BEAD CORE | |
| L151 | J0JKA0000038 | BEAD CORE | |
| L1529 | G0C4R7JA0021 | COIL | |
| L1530 | ELJFC4R7KFB | CHIP INDUCTOR | |
| L1731 | ELJFC4R7KFB | CHIP INDUCTOR | |
| L1740 | J0JKB0000034 | EMI FILTER | |
| L2301 | J0JKA0000038 | BEAD CORE | |
| L2302 | J0JKA0000038 | BEAD CORE | |
| L2304 | J0JKA0000038 | BEAD CORE | |
| L2305 | J0JKA0000038 | BEAD CORE | |
| L2361 | J0JKB0000034 | EMI FILTER | |
| L2364 | J0JKB0000034 | EMI FILTER | |
| L310 | J0JKA0000038 | BEAD CORE | |
| L311 | J0JKA0000038 | BEAD CORE | |
| L3201 | TALV35VB6R8K | PEAKING COIL | |
| L3202 | TALV35VB6R8K | PEAKING COIL | |
| L3206 | J0JKA0000038 | BEAD CORE | |
| L3208 | J0JKA0000038 | BEAD CORE | |
| L3250 | G0BYYYG00005 | BEAD CORE | |
| L351 | J0JKA0000038 | BEAD CORE | |
| L352 | J0JKA0000038 | BEAD CORE | |
| L353 | J0JKA0000038 | BEAD CORE | |
| L382 | J0JKB0000034 | EMI FILTER | |
| L541 | EXC3BB221H | CHIP BEAD CORE | |
| L582 | G0A181H00001 | CHOKE COIL | |
| L583 | G0A4R7D00001 | COIL | |
| L584 | ELH5L7719 | LINEARITY COIL | |
| L701 | J0JKA0000038 | BEAD CORE | |
| L702 | G0A102F00002 | COIL | |
| L705 | G0A221H00003 | CHOKE COIL | |
| L803 | J0JKB0000034 | EMI FILTER | |
| L804 | J0JKA0000038 | BEAD CORE | |
| L805 | J0JKA0000038 | BEAD CORE | |
| L806 | J0JKA0000038 | BEAD CORE | |
| L807 | J0JKA0000038 | BEAD CORE | |
| L808 | J0JKA0000038 | BEAD CORE | |
| L809 | J0JKA0000038 | BEAD CORE | |
| L810 | J0JKA0000038 | BEAD CORE | |
| L811 | J0JKA0000038 | BEAD CORE | |

| | | | |
|---|---|---|---|
| [illegible] | [illegible] | [illegible] | |

| Ref. No. | Part No. | Part Name & Description | Remarks |
|---|---|---|---|
| L835 | EXCELSA39E | BEAD CHOKE | |
| L837 | J0JKA0000038 | BEAD CORE | |
| L850 | EXCELSA39E | BEAD CHOKE | |
| L852 | J0JKA0000023 | BEAD CORE | |
| L853 | J0JKA0000038 | BEAD CORE | |
| L855 | J0JKA0000038 | BEAD CORE | |
| L856 | TALL08T470KA | INDUCTION COIL | |
| L857 | J0JKA0000038 | BEAD CORE | |
| L860 | J0JKA0000038 | BEAD CORE | |
| L861 | J0JKA0000038 | BEAD CORE | |
| L870 | TLPF095 | CHOKE COIL | |
| L871 | TLPF095 | CHOKE COIL | |
| L872 | J0JKB0000034 | EMI FILTER | |
| L874 | J0JKB0000034 | EMI FILTER | |
| L875 | J0JKB0000034 | EMI FILTER | |
| L876 | J0JKB0000034 | EMI FILTER | |
| L878 | J0JKA0000038 | BEAD CORE | |
| L879 | J0JKA0000038 | BEAD CORE | |
| L880 | J0JKA0000038 | BEAD CORE | |
| L883 | J0JKB0000034 | EMI FILTER | |
| L902 | J0JKA0000038 | BEAD CORE | |
| | TRANSISTORS | | |
| Q1001 | B1ABCE000015 | TRANSISTOR | |
| Q1002 | B1ABCE000015 | TRANSISTOR | |
| Q101 | B1ABCE000015 | TRANSISTOR | |
| Q102 | B1ABCE000015 | TRANSISTOR | |
| Q103 | B1ABCE000015 | TRANSISTOR | |
| Q1050 | B1ABCE000015 | TRANSISTOR | |
| Q1051 | B1ADDF000005 | TRANSISTOR | |
| Q109 | B1ABCE000015 | TRANSISTOR | |
| Q1130 | B1ABCE000015 | TRANSISTOR | |
| Q1140 | B1ABCE000015 | TRANSISTOR | |
| Q120 | B1ABCE000015 | TRANSISTOR | |
| Q1530 | B1ADDF000005 | TRANSISTOR | |
| Q1560 | B1ADDF000005 | TRANSISTOR | |
| Q1561 | B1ABCE000015 | TRANSISTOR | |
| Q1562 | B1ADDF000005 | TRANSISTOR | |
| Q1563 | B1ABCE000015 | TRANSISTOR | |
| Q1701 | B1ABCE000015 | TRANSISTOR | |
| Q1702 | B1ABCE000015 | TRANSISTOR | |
| Q1703 | B1ABCE000015 | TRANSISTOR | |
| Q1704 | B1ABCE000015 | TRANSISTOR | |
| Q1705 | B1ABCE000015 | TRANSISTOR | |
| Q1706 | B1HFCFA00006 | TRANSISTOR | |
| Q1707 | B1HFCFA00006 | TRANSISTOR | |
| Q1708 | B1HFCFA00006 | TRANSISTOR | |
| Q1711 | B1ABCE000015 | TRANSISTOR | |
| Q1712 | B1ABCE000015 | TRANSISTOR | |
| Q1719 | B1ABCE000015 | TRANSISTOR | |
| Q2101 | B1ADCE000012 | TRANSISTOR | |
| Q2201 | B1ABCE000015 | TRANSISTOR | |
| Q2202 | B1ADCE000012 | TRANSISTOR | |
| Q2203 | B1ABCE000015 | TRANSISTOR | |
| Q2204 | B1ADCE000012 | TRANSISTOR | |
| Q2205 | B1ADCE000012 | TRANSISTOR | |
| Q351 | B1ADDF000005 | TRANSISTOR | |
| Q352 | B1ADDF000005 | TRANSISTOR | |

| | | | |
|---|---|---|---|
| Q502 | DIADD-000000 | TRANSISTOR | |

| Ref. No. | Part No. | Part Name & Description | Remarks |
|---|---|---|---|
| Q4801 | B1ADDF000005 | TRANSISTOR | |
| Q503 | B1CFML000002 | TRANSISTOR | |
| Q551 | 2SC6074000RK | TRANSISTOR | |
| Q552 | 2SC1473A | TRANSISTOR | |
| Q557 | B1ADDF000005 | TRANSISTOR | |
| Q570 | 2SA10180QA | TRANSISTOR | |
| Q608 | B1ABCE000015 | TRANSISTOR | |
| Q703 | B1MBDLB00002 | TRANSISTOR | |
| Q713 | B1ABCE000015 | TRANSISTOR | |
| Q715 | B1ABCE000015 | TRANSISTOR | |
| Q820 | B1ABCE000015 | TRANSISTOR | |
| Q850 | B1ADCE000012 | TRANSISTOR | |
| Q860 | B1BCCM000002 | TRANSISTOR | |
| Q861 | B1ABCE000015 | TRANSISTOR | |
| Q862 | B1BAAN000037 | TRANSISTOR | |
| Q901 | B1ADDF000005 | TRANSISTOR | |
| Q902 | B1ABCE000015 | TRANSISTOR | |
| Q903 | B1BCBL000027 | TRANSISTOR | |
| Q904 | B1BABL000029 | TRANSISTOR | |
| | RESISTORS | | |
| R100 | ERDS2TJ101 | C 100OHM,J, 1/4W | |
| R1001 | ERJ6GEYJ332 | M 3.3KOHM,J,1/10W | |
| R1002 | ERJ6GEYJ103 | M 10KOHM,J,1/10W | |
| R1003 | ERJ6GEYJ103 | M 10KOHM,J,1/10W | |
| R1004 | ERJ6GEYJ101 | M 100OHM,J,1/10W | |
| R1005 | ERJ6GEYJ103 | M 10KOHM,J,1/10W | |
| R1020 | ERJ6GEYJ102 | M 1KOHM,J,1/10W | |
| R1021 | ERJ6GEYJ151 | M 150OHM,J,1/10W | |
| R1022 | ERJ6GEY0R00 | M 0OHM,J,1/10W | |
| R103 | ERDS2TJ101 | C 100OHM,J, 1/4W | |
| R104 | ERDS2TJ102 | C 1KOHM,J, 1/4W | |
| R105 | ERDS2TJ102 | C 1KOHM,J, 1/4W | |
| R1050 | ERJ6GEYJ271 | M 270OHM,J,1/10W | |
| R1051 | ERJ6GEYJ472 | M 4.7KOHM,J,1/10W | |
| R1053 | ERJ6GEYJ112 | M 1.1KOHM,J,1/10W | |
| R1056 | ERJ6GEYJ103 | M 10KOHM,J,1/10W | |
| R1057 | ERJ6GEYJ102 | M 1KOHM,J,1/10W | |
| R1058 | ERJ6GEYJ472 | M 4.7KOHM,J,1/10W | |
| R1061 | ERJ6ENF2321 | F 2.32KOHM, 1/10W | |
| R1062 | ERJ6ENF2211 | F 2.21KOHM, 1/10W | |
| R1063 | ERJ6ENF3241 | M3.24KOHM, 1/10W | |
| R1064 | ERJ6ENF5111 | F 5.11KOHM, 1/10W | |
| R1065 | ERJ6ENF9091 | M9.09KOHM, 1/10W | |
| R1066 | ERJ6ENF2152 | M21.5KOHM, 1/10W | |
| R1067 | ERJ6GEYJ390 | M 39OHM,J,1/10W | |
| R107 | ERDS2TJ473 | C 47KOHM,J, 1/4W | |
| R108 | ERDS2TJ473 | C 47KOHM,J, 1/4W | |
| R110 | ERJ6GEYJ101 | M 100OHM,J,1/10W | |
| R1101 | ERJ6GEYJ101 | M 100OHM,J,1/10W | |
| R1102 | ERJ6GEYJ101 | M 100OHM,J,1/10W | |
| R1103 | ERJ6GEYJ101 | M 100OHM,J,1/10W | |
| R1104 | ERJ6GEYJ101 | M 100OHM,J,1/10W | |
| R1110 | ERJ3GEYJ101 | M 100OHM,J,1/16W | |
| R112 | ERJ6GEYJ101 | M 100OHM,J,1/10W | |
| R1120 | ERJ6GEYJ101 | M 100OHM,J,1/10W | |
| R1121 | ERJ6GEYJ101 | M 100OHM,J,1/10W | |
| R113 | ERDS2TJ223 | C 22KOHM,J, 1/4W | |

| | | | |
|---|---|---|---|
| [illegible] | [illegible] | [illegible] | |

| Ref. No. | Part No. | Part Name & Description | Remarks |
|---|---|---|---|
| R1130 | ERJ3GEYJ103 | M 10KOHM,J,1/16W | |
| R1131 | ERJ3GEYJ102 | M 1KOHM,J,1/16W | |
| R114 | ERJ6GEYJ471 | M 470OHM,J,1/10W | |
| R1140 | ERJ3GEYJ332 | M 3.3KOHM,J,1/16W | |
| R1141 | ERJ3GEYJ332 | M 3.3KOHM,J,1/16W | |
| R1142 | ERJ3GEYJ101 | M 100OHM,J,1/16W | |
| R1143 | ERJ3GEYJ101 | M 100OHM,J,1/16W | |
| R1144 | ERJ6GEY0R00 | M 0OHM,J,1/10W | |
| R1145 | ERJ3GEYJ101 | M 100OHM,J,1/16W | |
| R1146 | ERJ3GEYJ472 | M 4.7KOHM,J,1/16W | |
| R1147 | ERJ3GEYJ103 | M 10KOHM,J,1/16W | |
| R1148 | ERJ3GEYJ103 | M 10KOHM,J,1/16W | |
| R115 | ERJ6GEYJ102 | M 1KOHM,J,1/10W | |
| R1150 | ERJ3GEYJ103 | M 10KOHM,J,1/16W | |
| R1151 | ERJ3GEYJ101 | M 100OHM,J,1/16W | |
| R1153 | ERJ3GEY0R00 | M 0OHM,J,1/16W | |
| R1154 | ERJ3GEYJ101 | M 100OHM,J,1/16W | |
| R1157 | ERJ6GEYJ472 | M 4.7KOHM,J,1/10W | |
| R1158 | ERJ6GEY0R00 | M 0OHM,J,1/10W | |
| R116 | ERJ6GEYJ101 | M 100OHM,J,1/10W | |
| R1160 | ERJ6GEYJ821 | M 820OHM,J,1/10W | |
| R1175 | ERJ3GEYJ101 | M 100OHM,J,1/16W | |
| R1176 | ERJ3GEYJ101 | M 100OHM,J,1/16W | |
| R1177 | ERJ3GEYJ202 | M 2KOHM,J,1/16W | |
| R1178 | ERJ3GEYJ202 | M 2KOHM,J,1/16W | |
| R1180 | ERJ6GEYJ103 | M 10KOHM,J,1/10W | |
| R1181 | ERJ6GEYJ103 | M 10KOHM,J,1/10W | |
| R1185 | ERJ3GEYJ220 | M 22OHM,J,1/16W | |
| R1186 | ERJ3GEY0R00 | M 0OHM,J,1/16W | |
| R1190 | ERJ6GEY0R00 | M 0OHM,J,1/10W | |
| R1191 | ERJ3GEY0R00 | M 0OHM,J,1/16W | |
| R1193 | ERJ6GEY0R00 | M 0OHM,J,1/10W | |
| R1194 | ERJ3GEY0R00 | M 0OHM,J,1/16W | |
| R1195 | ERJ3GEY0R00 | M 0OHM,J,1/16W | |
| R1196 | ERJ3GEY0R00 | M 0OHM,J,1/16W | |
| R1197 | ERJ6GEY0R00 | M 0OHM,J,1/10W | |
| R1198 | ERJ3GEY0R00 | M 0OHM,J,1/16W | |
| R1199 | ERJ6GEY0R00 | M 0OHM,J,1/10W | |
| R120 | ERJ6GEYJ561 | M 560OHM,J,1/10W | |
| R1201 | ERJ6GEYJ101 | M 100OHM,J,1/10W | |
| R1202 | ERJ6GEYJ101 | M 100OHM,J,1/10W | |
| R1203 | ERJ6GEYJ101 | M 100OHM,J,1/10W | |
| R1204 | ERJ6GEYJ101 | M 100OHM,J,1/10W | |
| R1205 | ERJ6GEY0R00 | M 0OHM,J,1/10W | |
| R1206 | ERJ6GEY0R00 | M 0OHM,J,1/10W | |
| R1207 | ERJ6GEY0R00 | M 0OHM,J,1/10W | |
| R1208 | ERJ6GEY0R00 | M 0OHM,J,1/10W | |
| R121 | ERJ6GEYJ222 | M 2.2KOHM,J,1/10W | |
| R1210 | ERJ6GEYJ220 | M 22OHM,J,1/10W | |
| R1211 | ERJ6GEY0R00 | M 0OHM,J,1/10W | |
| R1215 | ERJ6GEYJ470 | M 47OHM,J,1/10W | |
| R1216 | ERJ6GEY0R00 | M 0OHM,J,1/10W | |
| R1217 | ERJ6GEY0R00 | M 0OHM,J,1/10W | |
| R1218 | ERJ6GEY0R00 | M 0OHM,J,1/10W | |
| R122 | ERJ6GEYJ102 | M 1KOHM,J,1/10W | |
| R1220 | ERJ6GEYJ101 | M 100OHM,J,1/10W | |
| R1221 | ERJ6GEYJ101 | M 100OHM,J,1/10W | |

| | | | |
|---|---|---|---|
| [illegible] | [illegible] | [illegible] | |

| Ref. No. | Part No. | Part Name & Description | Remarks |
|---|---|---|---|
| R1222 | ERJ6GEYJ101 | M 100OHM,J,1/10W | |
| R1223 | ERJ6GEYJ101 | M 100OHM,J,1/10W | |
| R123 | ERJ6GEYJ271 | M 270OHM,J,1/10W | |
| R124 | ERJ6GEYJ271 | M 270OHM,J,1/10W | |
| R1240 | ERJ6GEYJ101 | M 100OHM,J,1/10W | |
| R1241 | ERJ6GEYJ101 | M 100OHM,J,1/10W | |
| R1242 | ERJ3GEYJ103 | M 10KOHM,J,1/16W | |
| R1243 | ERJ6GEYJ472 | M 4.7KOHM,J,1/10W | |
| R1244 | ERJ3GEY0R00 | M 0OHM,J,1/16W | |
| R1247 | ERJ6GEYJ750 | M 75OHM, 1/10W | |
| R1248 | ERJ6GEYJ750 | M 75OHM, 1/10W | |
| R125 | ERJ6GEY0R00 | M 0OHM,J,1/10W | |
| R1251 | ERJ6ENF4870 | F 487OHM, 1/10W | |
| R1252 | ERJ6ENF1001 | M 1KOHM, 1/10W | |
| R1253 | ERJ3GEYJ562 | M 5.6KOHM,J,1/16W | |
| R1254 | ERJ3GEYJ103 | M 10KOHM,J,1/16W | |
| R1255 | ERJ6GEY0R00 | M 0OHM,J,1/10W | |
| R1258 | ERJ3GEY0R00 | M 0OHM,J,1/16W | |
| R1261 | ERJ6GEYJ101 | M 100OHM,J,1/10W | |
| R1262 | ERJ6GEYJ471 | M 470OHM,J,1/10W | |
| R1264 | ERJ6GEY0R00 | M 0OHM,J,1/10W | |
| R1265 | ERJ3GEYJ561 | M 560OHM,J,1/16W | |
| R1266 | ERJ3GEYJ103 | M 10KOHM,J,1/16W | |
| R1267 | ERJ3GEYJ101 | M 100OHM,J,1/16W | |
| R1268 | ERJ3GEYJ101 | M 100OHM,J,1/16W | |
| R1269 | ERJ3GEYJ101 | M 100OHM,J,1/16W | |
| R1270 | ERJ6GEY0R00 | M 0OHM,J,1/10W | |
| R1271 | ERJ3GEY0R00 | M 0OHM,J,1/16W | |
| R1272 | ERJ3GEY0R00 | M 0OHM,J,1/16W | |
| R1273 | ERJ6GEY0R00 | M 0OHM,J,1/10W | |
| R1274 | ERJ6GEY0R00 | M 0OHM,J,1/10W | |
| R1275 | ERJ6GEY0R00 | M 0OHM,J,1/10W | |
| R1279 | ERJ6GEYJ222 | M 2.2KOHM,J,1/10W | |
| R129 | ERDS2TJ101 | C 100OHM,J, 1/4W | |
| R134 | ERJ6GEYJ101 | M 100OHM,J,1/10W | |
| R135 | ERJ6GEYJ101 | M 100OHM,J,1/10W | |
| R136 | ERJ6GEY0R00 | M 0OHM,J,1/10W | |
| R1401 | ERJ3GEY0R00 | M 0OHM,J,1/16W | |
| R1402 | ERJ6GEY0R00 | M 0OHM,J,1/10W | |
| R1403 | ERJ6GEY0R00 | M 0OHM,J,1/10W | |
| R1404 | ERJ6GEY0R00 | M 0OHM,J,1/10W | |
| R1405 | ERJ6GEY0R00 | M 0OHM,J,1/10W | |
| R1406 | ERJ3GEY0R00 | M 0OHM,J,1/16W | |
| R1407 | ERJ3GEY0R00 | M 0OHM,J,1/16W | |
| R1408 | ERJ3GEY0R00 | M 0OHM,J,1/16W | |
| R1409 | ERJ3GEY0R00 | M 0OHM,J,1/16W | |
| R141 | ERJ6GEYJ102 | M 1KOHM,J,1/10W | |
| R1410 | ERJ6GEY0R00 | M 0OHM,J,1/10W | |
| R1411 | ERJ6GEY0R00 | M 0OHM,J,1/10W | |
| R1412 | ERJ3GEY0R00 | M 0OHM,J,1/16W | |
| R1413 | ERJ3GEY0R00 | M 0OHM,J,1/16W | |
| R1414 | ERJ6GEY0R00 | M 0OHM,J,1/10W | |
| R1450 | ERJ3GEY0R00 | M 0OHM,J,1/16W | |
| R1451 | ERJ3GEY0R00 | M 0OHM,J,1/16W | |
| R1452 | ERJ6GEY0R00 | M 0OHM,J,1/10W | |
| R1453 | ERJ3GEY0R00 | M 0OHM,J,1/16W | |
| R1454 | ERJ3GEY0R00 | M 0OHM,J,1/16W | |

| | | | |
|---|---|---|---|
| [illegible] | [illegible] | [illegible] | |

| Ref. No. | Part No. | Part Name & Description | Remarks |
|---|---|---|---|
| R1455 | ERJ6GEY0R00 | M 0OHM,J,1/10W | |
| R1456 | ERJ6GEY0R00 | M 0OHM,J,1/10W | |
| R1457 | ERJ3GEY0R00 | M 0OHM,J,1/16W | |
| R1458 | ERJ6GEY0R00 | M 0OHM,J,1/10W | |
| R1459 | ERJ6GEY0R00 | M 0OHM,J,1/10W | |
| R1460 | ERJ6GEY0R00 | M 0OHM,J,1/10W | |
| R1501 | ERJ6GEY0R00 | M 0OHM,J,1/10W | |
| R1504 | ERJ6GEY0R00 | M 0OHM,J,1/10W | |
| R1505 | ERJ6GEY0R00 | M 0OHM,J,1/10W | |
| R1506 | ERJ6GEY0R00 | M 0OHM,J,1/10W | |
| R1507 | ERJ6GEY0R00 | M 0OHM,J,1/10W | |
| R1508 | ERJ6GEY0R00 | M 0OHM,J,1/10W | |
| R1509 | ERJ6GEY0R00 | M 0OHM,J,1/10W | |
| R1510 | ERJ6GEYJ750 | M 75OHM, 1/10W | |
| R1511 | ERJ6GEY0R00 | M 0OHM,J,1/10W | |
| R1515 | ERJ3GEY0R00 | M 0OHM,J,1/16W | |
| R1516 | ERJ6GEY0R00 | M 0OHM,J,1/10W | |
| R1517 | ERJ6GEY0R00 | M 0OHM,J,1/10W | |
| R1518 | ERJ6GEY0R00 | M 0OHM,J,1/10W | |
| R1519 | ERJ6GEY0R00 | M 0OHM,J,1/10W | |
| R1521 | ERJ3GEY0R00 | M 0OHM,J,1/16W | |
| R1522 | ERJ6GEY0R00 | M 0OHM,J,1/10W | |
| R1523 | ERJ6GEY0R00 | M 0OHM,J,1/10W | |
| R1525 | ERJ6GEY0R00 | M 0OHM,J,1/10W | |
| R1526 | ERJ6GEY0R00 | M 0OHM,J,1/10W | |
| R1530 | ERJ6GEYJ221 | M 220OHM,J,1/10W | |
| R1531 | ERJ3GEYJ470 | M 47OHM,J,1/16W | |
| R1534 | ERJ6GEY0R00 | M 0OHM,J,1/10W | |
| R1535 | ERJ3GEY0R00 | M 0OHM,J,1/16W | |
| R1536 | ERJ3GEYJ101 | M 100OHM,J,1/16W | |
| R1537 | ERJ3GEYJ103 | M 10KOHM,J,1/16W | |
| R1540 | ERJ6GEYJ101 | M 100OHM,J,1/10W | |
| R1541 | ERJ3GEYJ101 | M 100OHM,J,1/16W | |
| R1542 | ERJ3GEYJ101 | M 100OHM,J,1/16W | |
| R1543 | ERJ3GEYJ101 | M 100OHM,J,1/16W | |
| R1545 | ERJ3GEYJ101 | M 100OHM,J,1/16W | |
| R1546 | ERJ3GEYJ101 | M 100OHM,J,1/16W | |
| R1547 | ERJ3GEYJ101 | M 100OHM,J,1/16W | |
| R1548 | ERJ3GEYJ103 | M 10KOHM,J,1/16W | |
| R1549 | ERJ3GEYJ103 | M 10KOHM,J,1/16W | |
| R1550 | ERJ3GEYJ103 | M 10KOHM,J,1/16W | |
| R1555 | ERJ3GEYJ101 | M 100OHM,J,1/16W | |
| R1560 | ERJ6GEYJ101 | M 100OHM,J,1/10W | |
| R1561 | ERJ6GEYJ102 | M 1KOHM,J,1/10W | |
| R1562 | ERJ6GEYJ561 | M 560OHM,J,1/10W | |
| R1563 | ERJ6GEYJ431 | M 430OHM,J,1/10W | |
| R1564 | ERJ6GEYJ471 | M 470OHM,J,1/10W | |
| R1565 | ERJ6GEYJ103 | M 10KOHM,J,1/10W | |
| R1566 | ERJ6ENF75R0 | M 75OHM, 1/10W | |
| R1567 | ERJ6GEYJ181 | M 180OHM,J,1/10W | |
| R1568 | ERJ6GEYJ223 | M 22KOHM,J,1/10W | |
| R1569 | ERJ6GEYJ223 | M 22KOHM,J,1/10W | |
| R1570 | ERJ6GEYJ471 | M 470OHM,J,1/10W | |
| R1572 | ERJ3GEYJ101 | M 100OHM,J,1/16W | |
| R1573 | ERJ3GEY0R00 | M 0OHM,J,1/16W | |
| R1574 | ERJ6GEY0R00 | M 0OHM,J,1/10W | |
| R1575 | ERJ6GEY0R00 | M 0OHM,J,1/10W | |

| | | | |
|---|---|---|---|
| [illegible] | [illegible] | [illegible] | |

| Ref. No. | Part No. | Part Name & Description | Remarks |
|---|---|---|---|
| R1576 | ERJ3GEY0R00 | M 0OHM,J,1/16W | |
| R1577 | ERJ3GEY0R00 | M 0OHM,J,1/16W | |
| R1578 | ERJ6GEY0R00 | M 0OHM,J,1/10W | |
| R1579 | ERJ6GEY0R00 | M 0OHM,J,1/10W | |
| R1580 | ERJ3GEY0R00 | M 0OHM,J,1/16W | |
| R1581 | ERJ6GEY0R00 | M 0OHM,J,1/10W | |
| R1582 | ERJ6GEY0R00 | M 0OHM,J,1/10W | |
| R1585 | ERJ6GEY0R00 | M 0OHM,J,1/10W | |
| R1586 | ERJ6GEY0R00 | M 0OHM,J,1/10W | |
| R1587 | ERJ6GEY0R00 | M 0OHM,J,1/10W | |
| R1588 | ERJ6GEY0R00 | M 0OHM,J,1/10W | |
| R1589 | ERJ6GEY0R00 | M 0OHM,J,1/10W | |
| R1590 | ERJ6GEY0R00 | M 0OHM,J,1/10W | |
| R1591 | ERJ6GEY0R00 | M 0OHM,J,1/10W | |
| R1592 | ERJ6GEY0R00 | M 0OHM,J,1/10W | |
| R1593 | ERJ3GEY0R00 | M 0OHM,J,1/16W | |
| R1594 | ERJ3GEY0R00 | M 0OHM,J,1/16W | |
| R1596 | ERJ6GEY0R00 | M 0OHM,J,1/10W | |
| R1597 | ERJ6GEY0R00 | M 0OHM,J,1/10W | |
| R1701 | ERJ3GEY0R00 | M 0OHM,J,1/16W | |
| R1704 | ERJ3GEY0R00 | M 0OHM,J,1/16W | |
| R1705 | ERJ6GEY0R00 | M 0OHM,J,1/10W | |
| R1706 | ERJ3GEYJ272 | M 2.7KOHM,J,1/16W | |
| R1707 | ERJ3GEYJ102 | M 1KOHM,J,1/16W | |
| R1708 | ERJ3GEYJ101 | M 100OHM,J,1/16W | |
| R1709 | ERJ6GEYJ103 | M 10KOHM,J,1/10W | |
| R1710 | ERJ6GEYJ563 | M 56KOHM,J,1/10W | |
| R1712 | ERJ3GEYJ102 | M 1KOHM,J,1/16W | |
| R1715 | ERJ3GEYJ122 | M 1.2KOHM,J,1/16W | |
| R1716 | ERJ6GEYJ103 | M 10KOHM,J,1/10W | |
| R1717 | ERJ6GEYJ271 | M 270OHM,J,1/10W | |
| R1718 | ERJ3GEY0R00 | M 0OHM,J,1/16W | |
| R1720 | ERJ6GEYJ822 | M 8.2KOHM,J,1/10W | |
| R1721 | ERJ6GEYJ682 | M 6.8KOHM,J,1/10W | |
| R1723 | ERJ6GEYJ561 | M 560OHM,J,1/10W | |
| R1725 | ERJ3GEYJ102 | M 1KOHM,J,1/16W | |
| R1727 | ERJ3GEYJ101 | M 100OHM,J,1/16W | |
| R1728 | ERJ3GEYJ101 | M 100OHM,J,1/16W | |
| R1730 | ERJ6GEY0R00 | M 0OHM,J,1/10W | |
| R1732 | ERJ3GEYJ331 | M 330OHM,J,1/16W | |
| R1733 | ERJ3GEYJ331 | M 330OHM,J,1/16W | |
| R1734 | ERJ3GEYJ331 | M 330OHM,J,1/16W | |
| R1736 | ERJ6GEYJ102 | M 1KOHM,J,1/10W | |
| R1737 | ERJ3GEYJ620 | F 62OHM,J,1/10W | |
| R1738 | ERJ6GEYJ271 | M 270OHM,J,1/10W | |
| R1739 | ERJ6GEYJ102 | M 1KOHM,J,1/10W | |
| R1740 | ERJ3GEYJ620 | F 62OHM,J,1/10W | |
| R1741 | ERJ6GEYJ271 | M 270OHM,J,1/10W | |
| R1742 | ERJ6GEYJ102 | M 1KOHM,J,1/10W | |
| R1743 | ERJ3GEYJ620 | F 62OHM,J,1/10W | |
| R1744 | ERJ6GEYJ271 | M 270OHM,J,1/10W | |
| R1746 | ERJ3GEYJ472 | M 4.7KOHM,J,1/16W | |
| R1750 | ERJ6GEYJ152 | M 1.5KOHM,J,1/10W | |
| R1751 | ERJ3GEYJ244 | F 240KOHM,J,1/10W | |
| R1752 | ERJ3GEYJ560 | M 56OHM,J,1/16W | |
| R1757 | ERJ6GEYJ821 | M 820OHM,J,1/10W | |
| R1759 | ERJ3GEYJ101 | M 100OHM,J,1/16W | |

| | | | |
|---|---|---|---|
| [illegible] | [illegible] | [illegible] | |

| Ref. No. | Part No. | Part Name & Description | Remarks |
|---|---|---|---|
| R1760 | ERJ6GEYJ223 | M 22KOHM,J,1/10W | |
| R1762 | ERJ6GEYJ562 | M 5.6KOHM,J,1/10W | |
| R1763 | ERJ6GEYJ103 | M 10KOHM,J,1/10W | |
| R1766 | ERJ6GEY0R00 | M 0OHM,J,1/10W | |
| R1769 | ERJ3GEY0R00 | M 0OHM,J,1/16W | |
| R1780 | ERJ6GEYJ332 | M 3.3KOHM,J,1/10W | |
| R1781 | ERJ6GEYJ101 | M 100OHM,J,1/10W | |
| R1782 | ERJ6GEYJ102 | M 1KOHM,J,1/10W | |
| R1783 | ERJ6GEYJ271 | M 270OHM,J,1/10W | |
| R1784 | ERJ6GEYJ472 | M 4.7KOHM,J,1/10W | |
| R1788 | ERJ6GEYJ122 | M 1.2KOHM,J,1/10W | |
| R2007 | ERJ6GEY0R00 | M 0OHM,J,1/10W | |
| R2029 | ERJ6GEYJ101 | M 100OHM,J,1/10W | |
| R2032 | ERJ6GEYJ101 | M 100OHM,J,1/10W | |
| R2042 | ERJ6GEY0R00 | M 0OHM,J,1/10W | |
| R2043 | ERJ6GEY0R00 | M 0OHM,J,1/10W | |
| R2110 | ERJ6GEY0R00 | M 0OHM,J,1/10W | |
| R2112 | ERJ6GEYJ102 | M 1KOHM,J,1/10W | |
| R2113 | ERJ6GEY0R00 | M 0OHM,J,1/10W | |
| R2121 | ERDS1TJ101 | C 100OHM,J, 1/2W | |
| R2204 | ERJ6GEYJ471 | M 470OHM,J,1/10W | |
| R2205 | ERJ6GEYJ102 | M 1KOHM,J,1/10W | |
| R2206 | ERJ6GEYJ102 | M 1KOHM,J,1/10W | |
| R2207 | ERJ6GEYJ272 | M 2.7KOHM,J,1/10W | |
| R2208 | ERJ6GEYJ103 | M 10KOHM,J,1/10W | |
| R2209 | ERJ6GEYJ103 | M 10KOHM,J,1/10W | |
| R2210 | ERJ6GEYJ471 | M 470OHM,J,1/10W | |
| R2211 | ERJ6GEYJ102 | M 1KOHM,J,1/10W | |
| R2212 | ERJ6GEYJ102 | M 1KOHM,J,1/10W | |
| R2213 | ERJ6GEY0R00 | M 0OHM,J,1/10W | |
| R2214 | ERJ6GEY0R00 | M 0OHM,J,1/10W | |
| R2302 | ERX1SZJR18E | M 0.18OHM,J,1W | |
| R2306 | ERJ6GEY0R00 | M 0OHM,J,1/10W | |
| R2307 | ERJ6GEY0R00 | M 0OHM,J,1/10W | |
| R2308 | ERJ6GEY0R00 | M 0OHM,J,1/10W | |
| R2317 | ERJ6GEYJ132 | M 1.3KOHM,J,1/10W | |
| R2318 | ERG2FJS101E | M 100OHM,J, 2W | |
| R2325 | D0AE2R2JA046 | C 2.2OHM,J, 1/10W | |
| R2326 | D0AE2R2JA046 | C 2.2OHM,J, 1/10W | |
| R2328 | D0AE2R2JA046 | C 2.2OHM,J, 1/10W | |
| R2329 | ERJ6GEYJ2R2 | M 2.2OHM,J,1/10W | |
| R2360 | ERJ6GEYJ221 | M 220OHM,J,1/10W | |
| R2361 | ERJ6GEYJ221 | M 220OHM,J,1/10W | |
| R253 | ERJ6GEYJ751 | M 750OHM,J,1/10W | |
| R255 | ERJ6GEYJ751 | M 750OHM,J,1/10W | |
| R256 | ERDS2TJ472 | C 4.7KOHM,J, 1/4W | |
| R257 | ERDS2TJ472 | C 4.7KOHM,J, 1/4W | |
| R3100 | ERJ6GEYJ101 | M 100OHM,J,1/10W | |
| R3101 | ERJ6GEY0R00 | M 0OHM,J,1/10W | |
| R3102 | ERJ6GEY0R00 | M 0OHM,J,1/10W | |
| R3103 | ERJ6GEYJ184 | M 180KOHM,J,1/10W | |
| R3104 | ERJ6GEYJ184 | M 180KOHM,J,1/10W | |
| R3105 | ERJ6GEYJ102 | M 1KOHM,J,1/10W | |
| R3106 | ERJ6GEYJ102 | M 1KOHM,J,1/10W | |
| R3107 | ERJ6GEYJ750 | M 75OHM, 1/10W | |
| R3108 | ERJ6GEY0R00 | M 0OHM,J,1/10W | |
| R3109 | ERJ6GEYJ101 | M 100OHM,J,1/10W | |

| | | | |
|---|---|---|---|
| [illegible] | [illegible] | [illegible] | |

| Ref. No. | Part No. | Part Name & Description | Remarks |
|---|---|---|---|
| R3110 | ERJ6GEYJ102 | M 1KOHM,J,1/10W | |
| R3111 | ERJ6GEYJ750 | M 75OHM, 1/10W | |
| R3112 | ERJ6GEYJ750 | M 75OHM, 1/10W | |
| R3113 | ERJ6GEY0R00 | M 0OHM,J,1/10W | |
| R3114 | ERJ6GEY0R00 | M 0OHM,J,1/10W | |
| R3117 | ERJ6GEY0R00 | M 0OHM,J,1/10W | |
| R3118 | ERJ6GEY0R00 | M 0OHM,J,1/10W | |
| R3120 | ERJ6GEY0R00 | M 0OHM,J,1/10W | |
| R3121 | ERJ6GEY0R00 | M 0OHM,J,1/10W | |
| R3122 | ERJ6GEYJ101 | M 100OHM,J,1/10W | |
| R3123 | ERJ6GEYJ184 | M 180KOHM,J,1/10W | |
| R3124 | ERJ6GEYJ184 | M 180KOHM,J,1/10W | |
| R3125 | ERJ6GEYJ102 | M 1KOHM,J,1/10W | |
| R3126 | ERJ6GEYJ102 | M 1KOHM,J,1/10W | |
| R3127 | ERJ6GEYJ750 | M 75OHM, 1/10W | |
| R3128 | ERJ6GEY0R00 | M 0OHM,J,1/10W | |
| R3129 | ERJ6GEYJ101 | M 100OHM,J,1/10W | |
| R3130 | ERJ6GEYJ750 | M 75OHM, 1/10W | |
| R3131 | ERJ6GEYJ750 | M 75OHM, 1/10W | |
| R3132 | ERJ6GEYJ750 | M 75OHM, 1/10W | |
| R3133 | ERJ6GEY0R00 | M 0OHM,J,1/10W | |
| R3134 | ERJ6GEY0R00 | M 0OHM,J,1/10W | |
| R3135 | ERJ6GEY0R00 | M 0OHM,J,1/10W | |
| R3140 | ERJ6GEYJ101 | M 100OHM,J,1/10W | |
| R3141 | ERJ6GEY0R00 | M 0OHM,J,1/10W | |
| R3142 | ERJ6GEY0R00 | M 0OHM,J,1/10W | |
| R3143 | ERJ6GEYJ184 | M 180KOHM,J,1/10W | |
| R3144 | ERJ6GEYJ184 | M 180KOHM,J,1/10W | |
| R3145 | ERJ6GEYJ102 | M 1KOHM,J,1/10W | |
| R3146 | ERJ6GEYJ102 | M 1KOHM,J,1/10W | |
| R3147 | ERJ6GEYJ750 | M 75OHM, 1/10W | |
| R3148 | ERJ6GEY0R00 | M 0OHM,J,1/10W | |
| R3149 | ERJ6GEYJ101 | M 100OHM,J,1/10W | |
| R3160 | ERJ6GEYJ750 | M 75OHM, 1/10W | |
| R3161 | ERJ6GEYJ750 | M 75OHM, 1/10W | |
| R3162 | ERJ6GEYJ750 | M 75OHM, 1/10W | |
| R3163 | ERJ6GEY0R00 | M 0OHM,J,1/10W | |
| R3164 | ERJ6GEY0R00 | M 0OHM,J,1/10W | |
| R3165 | ERJ6GEY0R00 | M 0OHM,J,1/10W | |
| R3169 | ERJ6GEY0R00 | M 0OHM,J,1/10W | |
| R3170 | ERJ6GEY0R00 | M 0OHM,J,1/10W | |
| R3172 | ERJ6GEY0R00 | M 0OHM,J,1/10W | |
| R3175 | ERJ6GEY0R00 | M 0OHM,J,1/10W | |
| R3180 | ERJ6GEY0R00 | M 0OHM,J,1/10W | |
| R3184 | ERJ6GEY0R00 | M 0OHM,J,1/10W | |
| R3188 | ERJ6GEY0R00 | M 0OHM,J,1/10W | |
| R3203 | ERG1FJS151E | M 150OHM,J, 1W | |
| R3208 | ERG1FJS151E | M 150OHM,J, 1W | |
| R3209 | D0AE750JA046 | C 75OHM,J,1/10W | |
| R3212 | ERJ6GEYJ101 | M 100OHM,J,1/10W | |
| R3213 | ERJ6GEYJ101 | M 100OHM,J,1/10W | |
| R3214 | ERJ6GEYJ682 | M 6.8KOHM,J,1/10W | |
| R3215 | ERJ6GEYJ682 | M 6.8KOHM,J,1/10W | |
| R3216 | ERJ6GEYJ102 | M 1KOHM,J,1/10W | |
| R3218 | ERJ6GEY0R00 | M 0OHM,J,1/10W | |
| R3219 | ERJ6GEY0R00 | M 0OHM,J,1/10W | |
| R3220 | ERJ6GEY0R00 | M 0OHM,J,1/10W | |

| | | | |
|---|---|---|---|
| [illegible] | [illegible] | [illegible] | |

| Ref. No. | Part No. | Part Name & Description | Remarks |
|---|---|---|---|
| R3221 | ERJ6GEY0R00 | M 0OHM,J,1/10W | |
| R3222 | ERJ6GEY0R00 | M 0OHM,J,1/10W | |
| R3223 | ERJ6GEY0R00 | M 0OHM,J,1/10W | |
| R3224 | ERJ6GEY0R00 | M 0OHM,J,1/10W | |
| R3225 | ERJ6GEY0R00 | M 0OHM,J,1/10W | |
| R3226 | ERJ6GEY0R00 | M 0OHM,J,1/10W | |
| R350 | ERQ12AJ151P | F 150OHM,J,1/2W | |
| R351 | ERJ6GEYJ101 | M 100OHM,J,1/10W | |
| R352 | ERJ6GEYJ132 | M 1.3KOHM,J,1/10W | |
| R353 | ERJ6GEYJ821 | M 820OHM,J,1/10W | |
| R354 | ERJ6GEYJ102 | M 1KOHM,J,1/10W | |
| R355 | ERG1SJ683P | M 68KOHM,J,1W | |
| R356 | ERJ6GEY0R00 | M 0OHM,J,1/10W | |
| R357 | ERJ6GEYJ221 | M 220OHM,J,1/10W | |
| R358 | ERC12GK821 | S 820OHM,J,1/2W | |
| R359 | ERJ6GEYJ391 | M 390OHM,J,1/10W | |
| R360 | ERJ6GEYJ102 | M 1KOHM,J,1/10W | |
| R362 | ERJ6GEYJ132 | M 1.3KOHM,J,1/10W | |
| R363 | ERJ6GEYJ821 | M 820OHM,J,1/10W | |
| R364 | ERJ6GEYJ102 | M 1KOHM,J,1/10W | |
| R365 | ERG1SJ683P | M 68KOHM,J,1W | |
| R366 | ERJ6GEY0R00 | M 0OHM,J,1/10W | |
| R367 | ERJ6GEY0R00 | M 0OHM,J,1/10W | |
| R368 | ERC12GK821 | S 820OHM,J,1/2W | |
| R369 | ERJ6GEY0R00 | M 0OHM,J,1/10W | |
| R370 | ERQ1CJP1R5S | F 1.5OHM, J, 1W | |
| R371 | ERJ6GEY0R00 | M 0OHM,J,1/10W | |
| R372 | ERJ6GEYJ132 | M 1.3KOHM,J,1/10W | |
| R373 | ERJ6GEYJ821 | M 820OHM,J,1/10W | |
| R375 | ERG1SJ683P | M 68KOHM,J,1W | |
| R376 | ERJ6GEY0R00 | M 0OHM,J,1/10W | |
| R378 | ERC12GK821 | S 820OHM,J,1/2W | |
| R380 | ERJ6GEYJ392 | M 3.9KOHM,J,1/10W | |
| R381 | ERJ6GEYJ162 | M 1.6KOHM,J,1/10W | |
| R451 | ERJ6GEYJ223 | M 22KOHM,J,1/10W | |
| R453 | ERJ6GEYJ273 | M 27KOHM,J,1/10W | |
| R454 | ERJ6GEYJ183 | M 18KOHM,J,1/10W | |
| R455 | ERDS2TJ223 | C 22KOHM,J, 1/4W | |
| R458 | ERDS1TJ1R0 | C 1OHM,J, 1/2W | |
| R460 | ERG2FJ181H | M 180OHM,J, 2W | |
| R461 | ERX2SJSR68H | M 0.68OHM,J, 2W | |
| R465 | ERJ6GEYJ681 | M 680OHM,J,1/10W | |
| R466 | D0AE621JA046 | C 620OHM,J, 1/4W | |
| R467 | ERJ6GEYJ472 | M 4.7KOHM,J,1/10W | |
| R4817 | ERG2FJ100H | M 10OHM,J, 2W | |
| R4818 | ERJ6GEYJ243 | M 24KOHM,J,1/10W | |
| R4819 | ERJ6GEYJ101 | M 100OHM,J,1/10W | |
| R4820 | ERJ6GEYJ243 | M 24KOHM,J,1/10W | |
| R4821 | ERJ6GEYJ333 | M 33KOHM,J,1/10W | |
| R4822 | ERJ6GEYJ681 | M 680OHM,J,1/10W | |
| R4823 | ERJ6GEY0R00 | M 0OHM,J,1/10W | |
| R4824 | ERJ6GEYJ681 | M 680OHM,J,1/10W | |
| R501 | ERJ6GEYJ392 | M 3.9KOHM,J,1/10W | |
| R503 | ERJ6GEYJ103 | M 10KOHM,J,1/10W | |
| R504 | ERJ6GEYJ753 | M 75KOHM,J,1/10W | |
| R505 | ERJ6GEYJ153 | M 15KOHM,J,1/10W | |
| R506 | ERJ6GEYJ473 | M 47KOHM,J,1/10W | |

| | | | |
|---|---|---|---|
| [illegible] | [illegible] | [illegible] | |

| Ref. No. | Part No. | Part Name & Description | Remarks |
|---|---|---|---|
| R507 | ERG2SJS330H | M 33OHM,J, 2W | |
| R509 | ERG1SJ222E | M 2.2KOHM,J,1/10W | |
| R510 | ERJ6ENF1152 | M11.5KOHM, 1/10W | |
| R512 | ERJ6ENF1132 | M11.3KOHM, 1/10W | |
| R513 | ERQ14AJ100E | F 10OHM,J, 1/4W | |
| R541 | ERJ6GEYJ473 | M 47KOHM,J,1/10W | |
| R553 | ERX1SJWR47E | M 0.47OHM,J,1/10W | |
| R556 | ERJ6GEYJ124 | M 120KOHM,J,1/10W | |
| R558 | ERG1DJ124P | M 120KOHM,J, 1W | |
| R559 | ERJ6GEYJ561 | M 560OHM,J,1/10W | |
| R560 | ERJ6GEYJ274 | M 270KOHM,J,1/10W | |
| R561 | ERJ6GEYJ223 | M 22KOHM,J,1/10W | |
| R563 | ERJ6GEYJ564 | M 560KOHM,J,1/10W | |
| R564 | ERJ6GEYJ563 | M 56KOHM,J,1/10W | |
| R567 | ERJ6GEYJ124 | M 120KOHM,J,1/10W | |
| R568 | ERDS1TJ120 | C 12OHM,J, 1/2W | |
| R570 | ERJ6GEYJ513 | M 51KOHM,J,1/10W | |
| R571 | ERJ6GEYJ103 | M 10KOHM,J,1/10W | |
| R572 | ERDS1TJ104 | C 100KOHM,J, 1/2W | |
| R573 | ERJ6GEYJ272 | M 2.7KOHM,J,1/10W | |
| R576 | ERQ12HKR39P | F 0.39OHM,J, 1/2W | |
| R581 | ERQ2CJP151S | F 150OHM,J, 2W | |
| R702 | ERX3FJS3R3D | M 3.3OHM, J, 3W | |
| R703 | D0DK3R3J0002 | W 3.3OHM, J, 10W | |
| R704 | ERJ6GEYJ203 | M 20KOHM,J,1/10W | |
| R715 | ERDS2TJ182 | C 1.8KOHM,J, 1/4W | |
| R716 | ERJ6GEYJ680 | M 68OHM,J,1/10W | |
| R745 | ERDS2TJ123 | C 12KOHM,J, 1/4W | |
| R746 | ERJ6GEYJ102 | M 1KOHM,J,1/10W | |
| R747 | ERJ6GEYJ102 | M 1KOHM,J,1/10W | |
| R801 | ERC12ZGK825C | S 8.2MOHM,J,1/2W | |
| R802 | D0D72R7KA002 | W 2.7OHM,J, 7W | |
| R803 | ERJ6GEYJ681 | M 680OHM,J,1/10W | |
| R804 | ERDS1TJ682 | C 6.8KOHM,J, 1/2W | |
| R806 | ERG2SJW473E | M 47KOHM,J, 2W | |
| R820 | ERJ6GEYJ391 | M 390OHM,J,1/10W | |
| R821 | ERJ6GEYJ104 | M 100KOHM,J,1/10W | |
| R822 | ERDS1TJ470 | C 47OHM,J, 1/2W | |
| R831 | ERG2SJW104E | M 100KOHM,J,1/10W | |
| R832 | ERG2SJW470E | M 47OHM,J, 2W | |
| R833 | D0C1100JA051 | M 10OHM,J, 1W | |
| R834 | ERDS2TJ102 | C 1KOHM,J, 1/4W | |
| R840 | RCR100TAJ825 | C 8.2MOHM,J, 1W | |
| R841 | ERDS2TJ393 | C 39KOHM,J, 1/4W | |
| R842 | ERDS2TJ221 | C 220OHM,J, 1/4W | |
| R843 | ERX2FZJR12H | M 0.12OHM,J, 2W | |
| R844 | ERX2FZJR15H | M 0.15OHM,J, 2W | |
| R845 | ERDS2TJ473 | C 47KOHM,J, 1/4W | |
| R846 | ERDS2TJ182 | C 1.8KOHM,J, 1/4W | |
| R850 | ERJ6GEYJ433 | M 43KOHM,J,1/10W | |
| R851 | ERJ6GEYJ103 | M 10KOHM,J,1/10W | |
| R852 | ERJ6GEYJ752 | M 7.5KOHM,J,1/10W | |
| R853 | ERJ6GEYJ752 | M 7.5KOHM,J,1/10W | |
| R854 | ERJ6GEYJ752 | M 7.5KOHM,J,1/10W | |
| R855 | ERJ6GEYJ752 | M 7.5KOHM,J,1/10W | |
| R860 | ERG3FJ470H | M 47OHM,J, 3W | |

| Ref. No. | Part No. | Part Name & Description | Remarks |
|---|---|---|---|
| R862 | ERDS2TJ104 | C 100KOHM,J, 1/4W | |
| R863 | ERDS2TJ152 | C 1.5KOHM,J, 1/4W | |
| R865 | ERDS1TJ100 | C 10OHM,J, 1/2W | |
| R867 | ERDS1TJ751 | C 750OHM,J, 1/2W | |
| R868 | ERDS1TJ122 | C 1.2KOHM,J, 1/2W | |
| R869 | ERJ6GEYJ153 | M 15KOHM,J,1/10W | |
| R870 | ERJ6GEYJ103 | M 10KOHM,J,1/10W | |
| R871 | ERJ6GEYJ272 | M 2.7KOHM,J,1/10W | |
| R872 | ERJ6GEYJ103 | M 10KOHM,J,1/10W | |
| R873 | ERJ6GEYJ472 | M 4.7KOHM,J,1/10W | |
| R874 | ERJ6ENF1873 | F 187KOHM,J, 1/10W | |
| R875 | ERJ6ENF3012 | F 30.1KOHM,J, 1/10W | |
| R876 | ERJ6ENF5761 | M5.76KOHM, 1/10W | |
| R877 | ERJ6ENF2401 | M 2.4KOHM, 1/10W | |
| R879 | ERJ6ENF4301 | M 4.3KOHM, 1/10W | |
| R880 | ERJ6GEYJ473 | M 47KOHM,J,1/10W | |
| R886 | ERG2SJW273E | M 27KOHM,J, 2W | |
| R887 | ERJ6ENF5362 | M53.6KOHM, 1/10W | |
| R888 | ERJ6ENF2401 | M 2.4KOHM, 1/10W | |
| R889 | ERJ6ENF3092 | F 30.9KOHM,J, 1/10W | |
| R891 | ERJ6GEYJ473 | M 47KOHM,J,1/10W | |
| R895 | ERJ6GEYJ103 | M 10KOHM,J,1/10W | |
| R896 | ERDS2TJ472 | C 4.7KOHM,J, 1/4W | |
| R897 | ERJ6ENF1203 | F 120KOHM,J, 1/10W | |
| R898 | ERJ6ENF3902 | M 39KOHM, 1/10W | |
| R901 | ERJ6GEYJ471 | M 470OHM,J,1/10W | |
| R902 | ERDS2TJ122 | C 1.2KOHM,J, 1/4W | |
| R903 | D0AE100JA046 | C 10OHM,J, 1/10W | |
| R904 | ERG3FJ331H | M 330OHM,J, 3W | |
| R905 | ERJ6GEYJ471 | M 470OHM,J,1/10W | |
| R906 | ERDS2TJ122 | C 1.2KOHM,J, 1/4W | |
| R907 | ERDS2TJ124 | C 120KOHM,J, 1/4W | |
| R908 | ERDS2TJ124 | C 120KOHM,J, 1/4W | |
| R909 | D0AE100JA046 | C 10OHM,J, 1/10W | |
| R910 | ERG2SJ181E | M 180OHM,J, 2W | |
| R914 | ERJ6GEYJ331 | M 330OHM,J,1/10W | |
| R915 | ERC14GK220 | S 22OHM,J, 1/10W | |
| R916 | ERJ6GEY0R00 | M 0OHM,J,1/10W | |
| R917 | ERJ6GEYJ471 | M 470OHM,J,1/10W | |
| R918 | ERJ6GEYJ471 | M 470OHM,J,1/10W | |
| R919 | ERJ6GEYJ471 | M 470OHM,J,1/10W | |
| | TRANSFORMERS | | |
| T501 | ETH19Y212BZ | H DRIVE TRANS | |
| T551 | ZTFP14508A | FLYBACK TRANS | |
| T801 | ETS42AE3M6AD | SWITCHING TRANS | |
| | OTHERS | | |
| A1 | K1KA64BA0149 | CONNECTOR | |
| A2 | K1KA08BA0055 | CONNECTOR | |
| CF806A | D4DDE9R00002 | POSISTOR | |
| D1 | K1KB64AA0096 | CONNECTOR | |
| D3 | K1KA07AA0190 | CONNECTOR | |
| D15 | K1KA04AA0093 | CONNECTOR | |
| D16 | K1KA05AA0190 | CONNECTOR | |
| D17 | K1KA03AA0190 | CONNECTOR | |
| D26 | K1KA09AA0190 | CONNECTOR | |

| Ref. No. | Part No. | Part Name & Description | Remarks |
|---|---|---|---|
| D27 | K1KA09AA0190 | CONNECTOR | |
| F801 | K5D502BLA016 | FUSE | |
| FL1134 | ELKE103FA | NOISE FILTER | |
| FL1180 | ELKE103FA | NOISE FILTER | |
| FL1203 | ELKE103FA | NOISE FILTER | |
| FL1270 | ELKE103FA | NOISE FILTER | |
| FL1501 | ELKE103FA | NOISE FILTER | |
| FL1706 | ELKE103FA | NOISE FILTER | |
| FL1713 | J0HAAB000012 | EMI FILTER | |
| G14 | K1KA04AA0190 | CONNECTOR | |
| G16 | K1KA05AA0190 | CONNECTOR | |
| G26 | K1KA09AA0190 | CONNECTOR | |
| G27 | K1KA09AA0190 | CONNECTOR | |
| JA1 | ERJ6GEY0R00 | M 0OHM,J,1/10W | |
| JA1 | ERJ6GEY0R00 | M 0OHM,J,1/10W | |
| JA10 | ERJ6GEY0R00 | M 0OHM,J,1/10W | |
| JA11 | ERJ6GEY0R00 | M 0OHM,J,1/10W | |
| JA12 | ERJ6GEY0R00 | M 0OHM,J,1/10W | |
| JA13 | ERJ6GEY0R00 | M 0OHM,J,1/10W | |
| JA14 | ERJ6GEY0R00 | M 0OHM,J,1/10W | |
| JA4 | ERJ6GEY0R00 | M 0OHM,J,1/10W | |
| JA5 | ERJ6GEY0R00 | M 0OHM,J,1/10W | |
| JA8 | ERJ6GEY0R00 | M 0OHM,J,1/10W | |
| JA9 | ERJ6GEY0R00 | M 0OHM,J,1/10W | |
| JK3101 | K4BK35A00002 | AV TERMINAL | |
| JK3201 | K4BK20B00001 | AV TERMINAL | |
| JSD030 | ERJ6GEY0R00 | M 0OHM,J,1/10W | |
| JSD089 | ERJ6GEY0R00 | M 0OHM,J,1/10W | |
| JSD090 | ERJ6GEY0R00 | M 0OHM,J,1/10W | |
| L2 | K1KA08AA0190 | CONNECTOR | |
| L3 | K1KA07AA0190 | CONNECTOR | |
| L8 | K1ZZ00001301 | CONNECTOR | |
| L11 | K1KA03AA0190 | CONNECTOR | |
| L12 | K1ZZ00001300 | CONNECTOR | |
| LF801 | TLP4GD020 | LINE FILTER | |
| LF802 | TLP4GD020 | LINE FILTER | |
| PC841 | B3PAA0000261 | PHOTO COUPLER | |
| RL801 | K6B1CDA00028 | RELAY | |
| RM1050 | B3RAD0000120 | REMOCON RECEIVER | |
| RT1 | K1KA03AA0190 | CONNECTOR | |
| SC381 | K3B09CA00014 | CRT SOCKET | |
| SW1061 | EVQ11G05R | SWITCH | |
| SW1062 | EVQ11G05R | SWITCH | |
| SW1063 | EVQ11G05R | SWITCH | |
| SW1064 | EVQ11G05R | SWITCH | |
| SW1065 | EVQ11G05R | SWITCH | |
| SW1066 | EVQ11G05R | SWITCH | |
| SW801 | ESB92DA1B | SWITCH | |
| TU101 | ENG39A02GRF | TUNER | |
| X1140 | H0D202500006 | CRYSTAL OSC | |
| X1201 | H0D202500006 | CRYSTAL OSC | |
| X1701 | H1A5004A0002 | CRYSTAL OSC | |

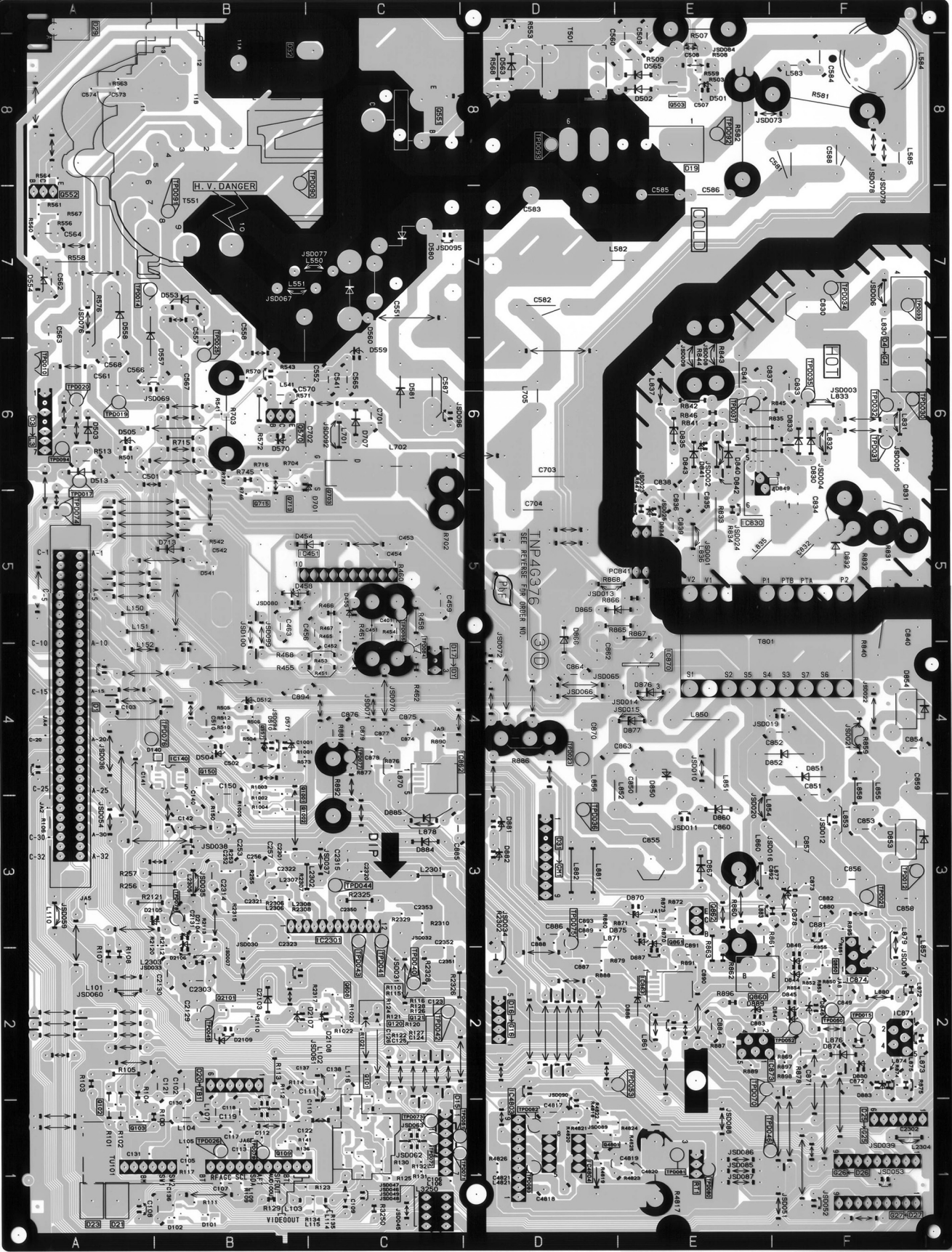
H. V. DANGER
COLD
HOT
TNP4G376
SEE REVERSE FOR ORDER NO.
DIP
RFAGC SCL
VIDEOOUT

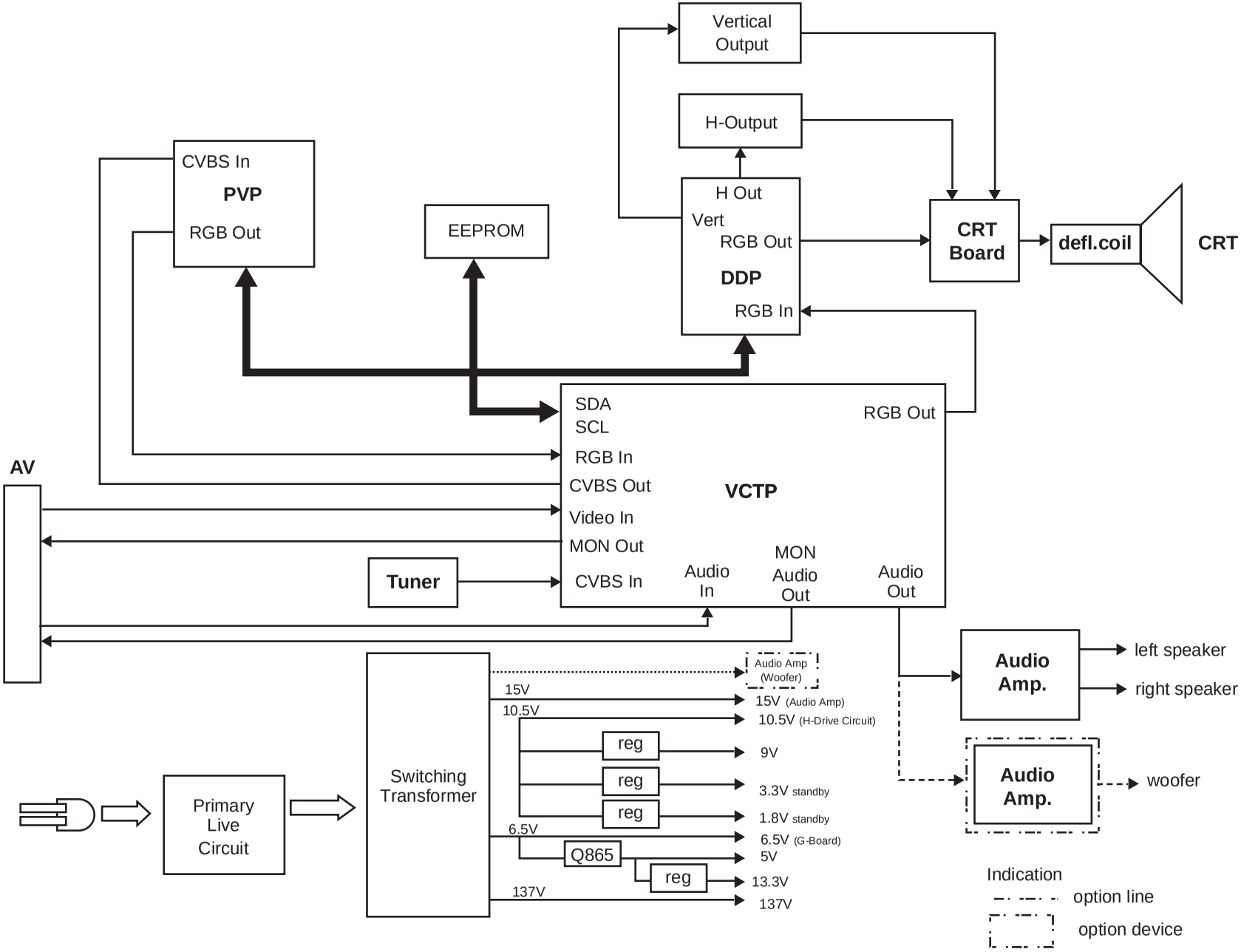


**GP21 BLOCK DIAGRAM**

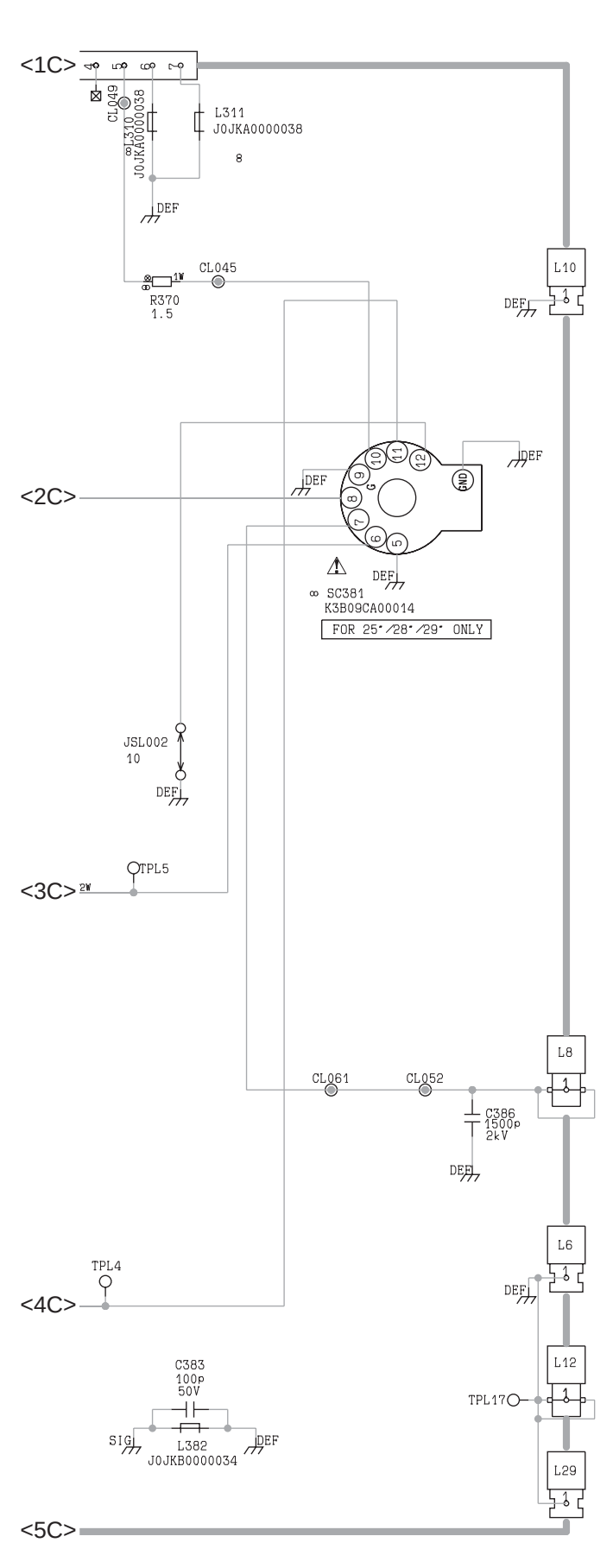

<1C>
4
5
6
7
CL049
L310
J0JKA0000038
L311
J0JKA0000038
8
DEF
CL045
1W
R370
1.5
L10
1
DEF
<2C>
DEF
10
11
12
9
G
8
7
6
5
GND
DEF
DEF
SC381
K3B09CA00014
FOR 25"/28"/29" ONLY
JSL002
10
DEF
TPL5
<3C>
2W
L8
1
CL061
CL052
C386
1500p
2kV
DEF
L6
1
TPL4
DEF
<4C>
L12
1
TPL17
C383
100p
50V
SIG
L382
J0JKB0000034
DEF
L29
1
<5C>

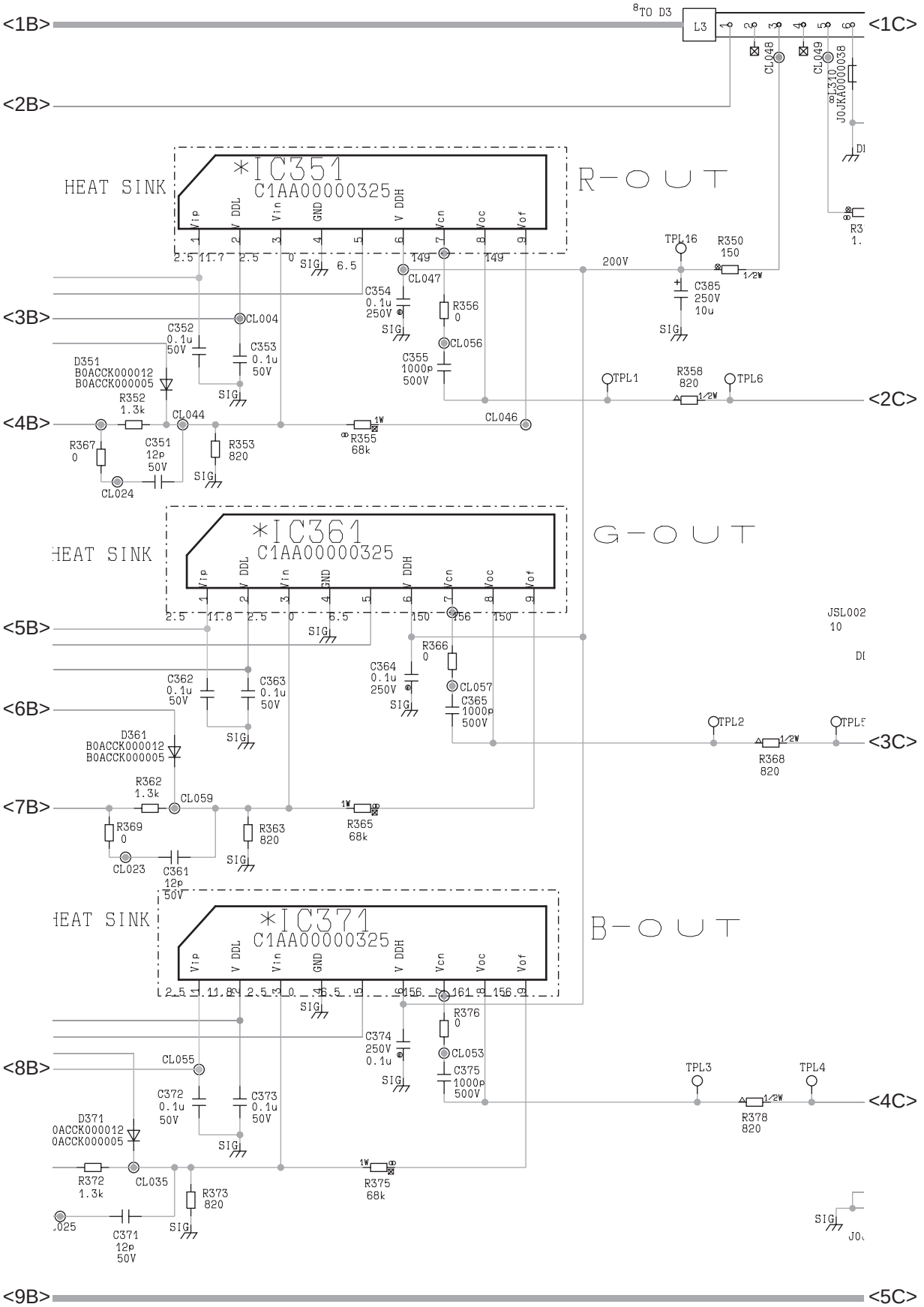
8TO D3
L3
<1B>
<1C>
<2B>
CL048
CL049
L310
JOJKA0000038
HEAT SINK
*IC351
C1AA00000325
R-OUT
Vip
V DDL
Vin
GND
V DDH
Vcn
Voc
Vof
2.5 11.7 2.5 0 6.5 149 149
SIG
CL047
C354
0.1u
250V
R356
0
CL056
C355
1000p
500V
TPL16
R350
150
1/2W
200V
C385
250V
10u
<3B>
CL004
C352
0.1u
50V
C353
0.1u
50V
D351
B0ACCK000012
B0ACCK000005
TPL1
R358
820
TPL6
<2C>
R352
1.3k
CL044
CL046
<4B>
R367
0
C351
12p
50V
R353
820
R355
68k
CL024
HEAT SINK
*IC361
C1AA00000325
G-OUT
2.5 11.8 2.5 0 6.5 150 156 150
<5B>
R366
0
C364
0.1u
250V
CL057
C365
1000p
500V
C362
0.1u
50V
C363
0.1u
50V
<6B>
D361
B0ACCK000012
B0ACCK000005
TPL2
R368
820
<3C>
R362
1.3k
CL059
<7B>
R369
0
R363
820
R365
68k
CL023
C361
12p
50V
HEAT SINK
*IC371
C1AA00000325
B-OUT
2.5 11.8 2.5 0 6.5 156 161 156
R376
0
C374
250V
0.1u
CL053
C375
1000p
500V
<8B>
CL055
C372
0.1u
50V
C373
0.1u
50V
TPL3
TPL4
R378
820
<4C>
D371
B0ACCK000012
B0ACCK000005
R372
1.3k
CL035
R373
820
R375
68k
C371
12p
50V
<9B>
<5C>

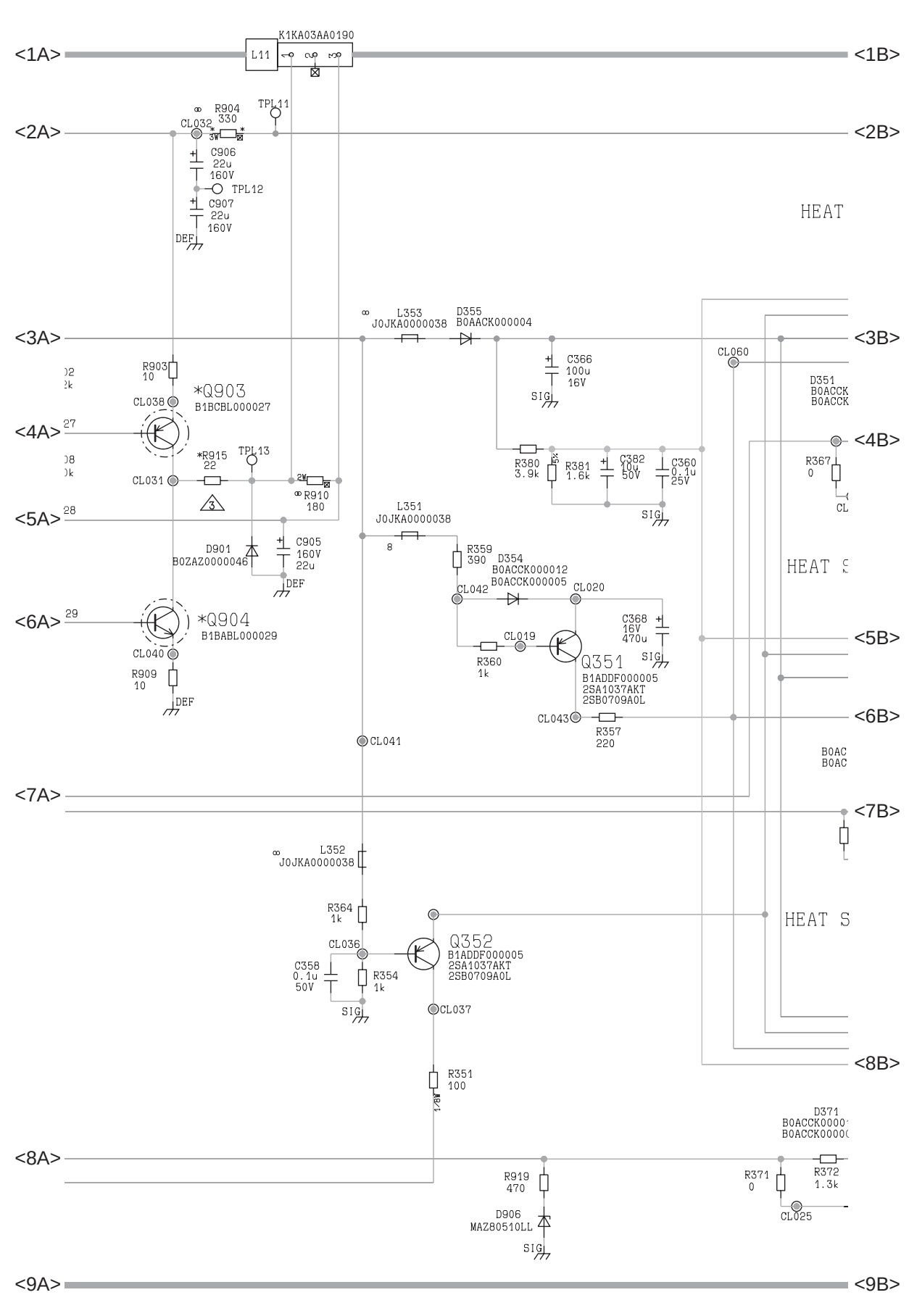
K1KA03AA0190
L11
<1A>
<1B>
<2A>
<2B>
R904
330
3W
CL032
TPL11
C906
22u
160V
TPL12
C907
22u
160V
DEF
HEAT
<3A>
<3B>
L353
J0JKA0000038
D355
B0AACK000004
C366
100u
16V
SIG
CL060
D351
B0ACCK
B0ACCK
R903
10
CL038
*Q903
B1BCBL000027
<4A>
<4B>
R380
3.9k
R381
1.6k
C382
10u
50V
C360
0.1u
25V
R367
0
*R915
22
TPL13
CL031
R910
180
<5A>
L351
J0JKA0000038
D901
B0ZAZ0000046
C905
160V
22u
R359
390
D354
B0ACCK000012
B0ACCK000005
CL042
CL020
HEAT S
<6A>
*Q904
B1BABL000029
CL040
R909
10
CL019
R360
1k
C368
16V
470u
Q351
B1ADDF000005
2SA1037AKT
2SB0709A0L
<5B>
CL043
R357
220
<6B>
CL041
B0AC
B0AC
<7A>
<7B>
L352
J0JKA0000038
R364
1k
HEAT S
CL036
C358
0.1u
50V
R354
1k
Q352
B1ADDF000005
2SA1037AKT
2SB0709A0L
CL037
<8B>
R351
100
D371
B0ACCK0000
B0ACCK0000
<8A>
R919
470
D906
MAZ80510LL
R371
0
R372
1.3k
CL025
<9A>
<9B>

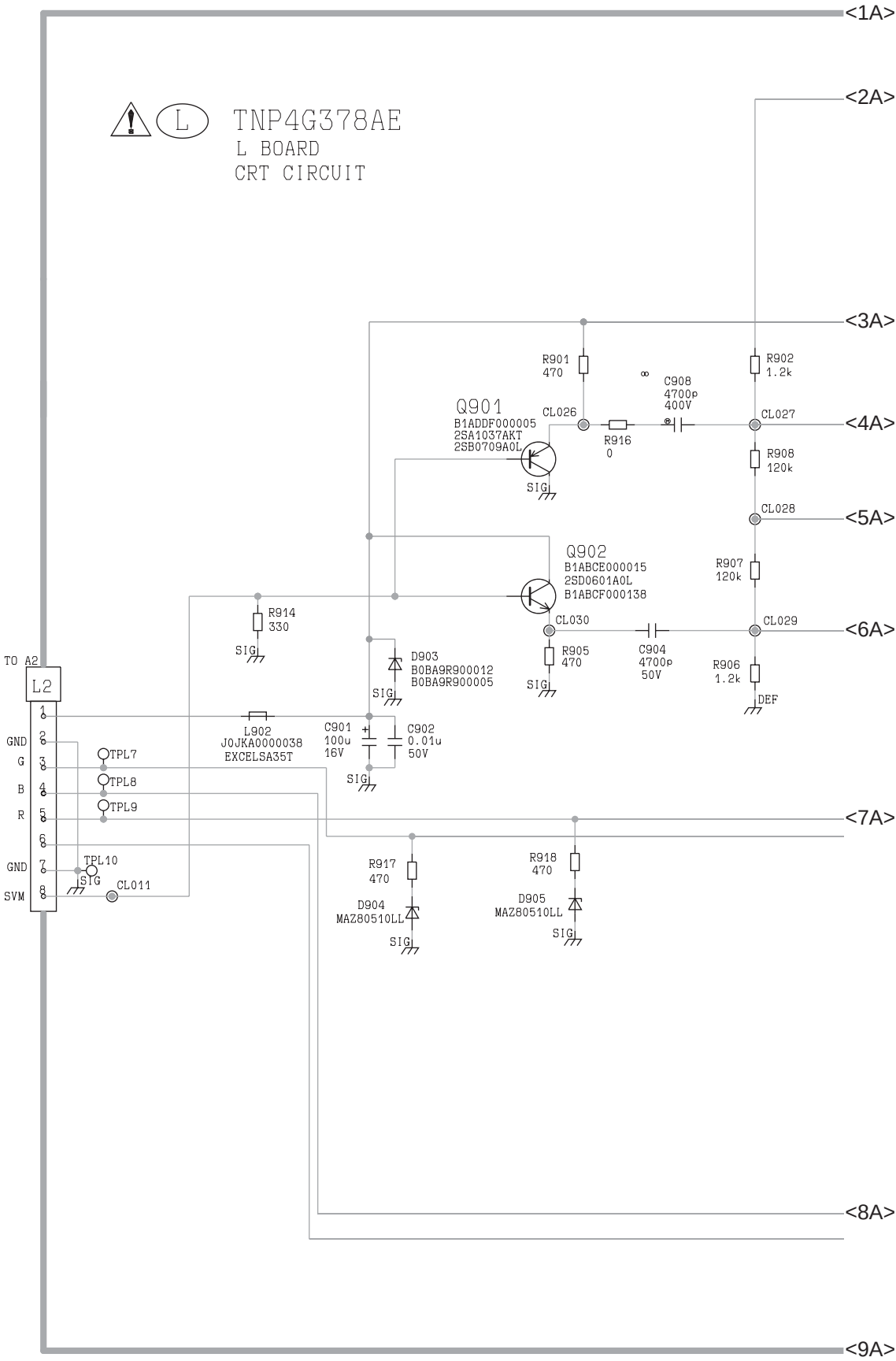
TNP4G378AE
L BOARD
CRT CIRCUIT
<1A>
<2A>
<3A>
<4A>
<5A>
<6A>
<7A>
<8A>
<9A>
R901
470
R902
1.2k
C908
4700p
400V
Q901
B1ADDF000005
2SA1037AKT
2SB0709A0L
CL026
R916
0
CL027
R908
120k
CL028
Q902
B1ABCE000015
2SD0601A0L
B1ABCF000138
R907
120k
R914
330
CL030
CL029
R905
470
C904
4700p
50V
R906
1.2k
D903
B0BA9R900012
B0BA9R900005
DEF
SIG
TO A2
L2
GND
G
B
R
GND
SVM
L902
J0JKA0000038
EXCELSA35T
C901
100u
16V
C902
0.01u
50V
TPL7
TPL8
TPL9
TPL10
CL011
R917
470
R918
470
D904
MAZ80510LL
D905
MAZ80510LL

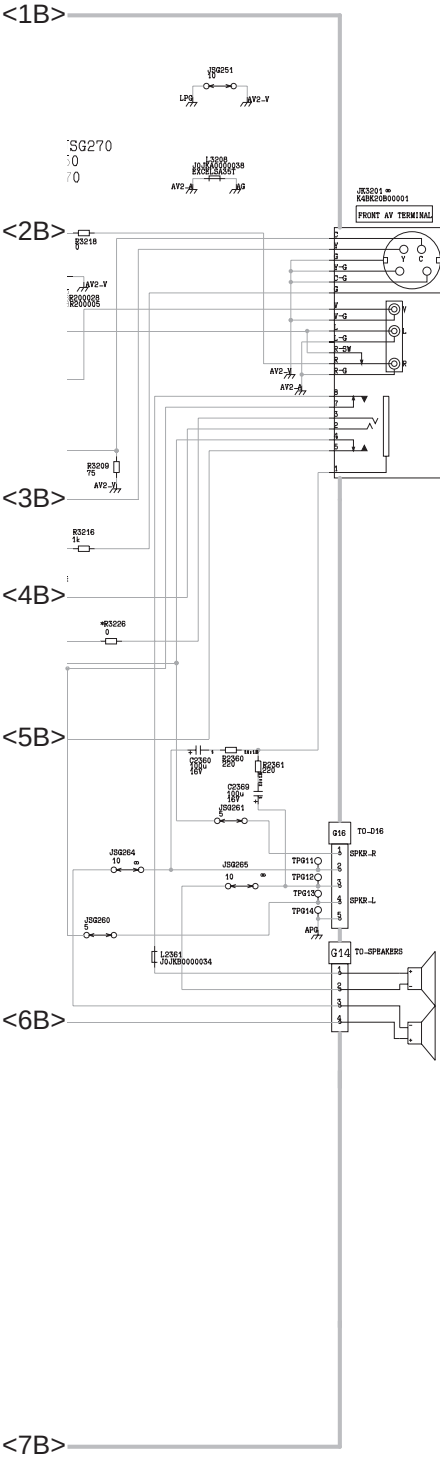

<1B>
<2B>
<3B>
<4B>
<5B>
<6B>
<7B>
JSG251
LPG
AV2_V
SG270
L3208
J0JKK0000038
EXCELSA351
AV2_A
AG
JK3201
K4BK20B00001
FRONT AV TERMINAL
R3218
0
AV2_V
R200028
R200005
AV2_V
AV2_A
R3209
75
AV2_V
R3216
1k
*R3226
0
C2360
100u
16V
R2360
220
R2361
220
C2369
100u
16V
JSG261
5
G16
TO_D16
SPKR_R
SPKR_L
TPG11
TPG12
TPG13
TPG14
APG
JSG264
10
JSG265
10
JSG260
5
L2361
J0JKB0000034
G14
TO_SPEAKERS

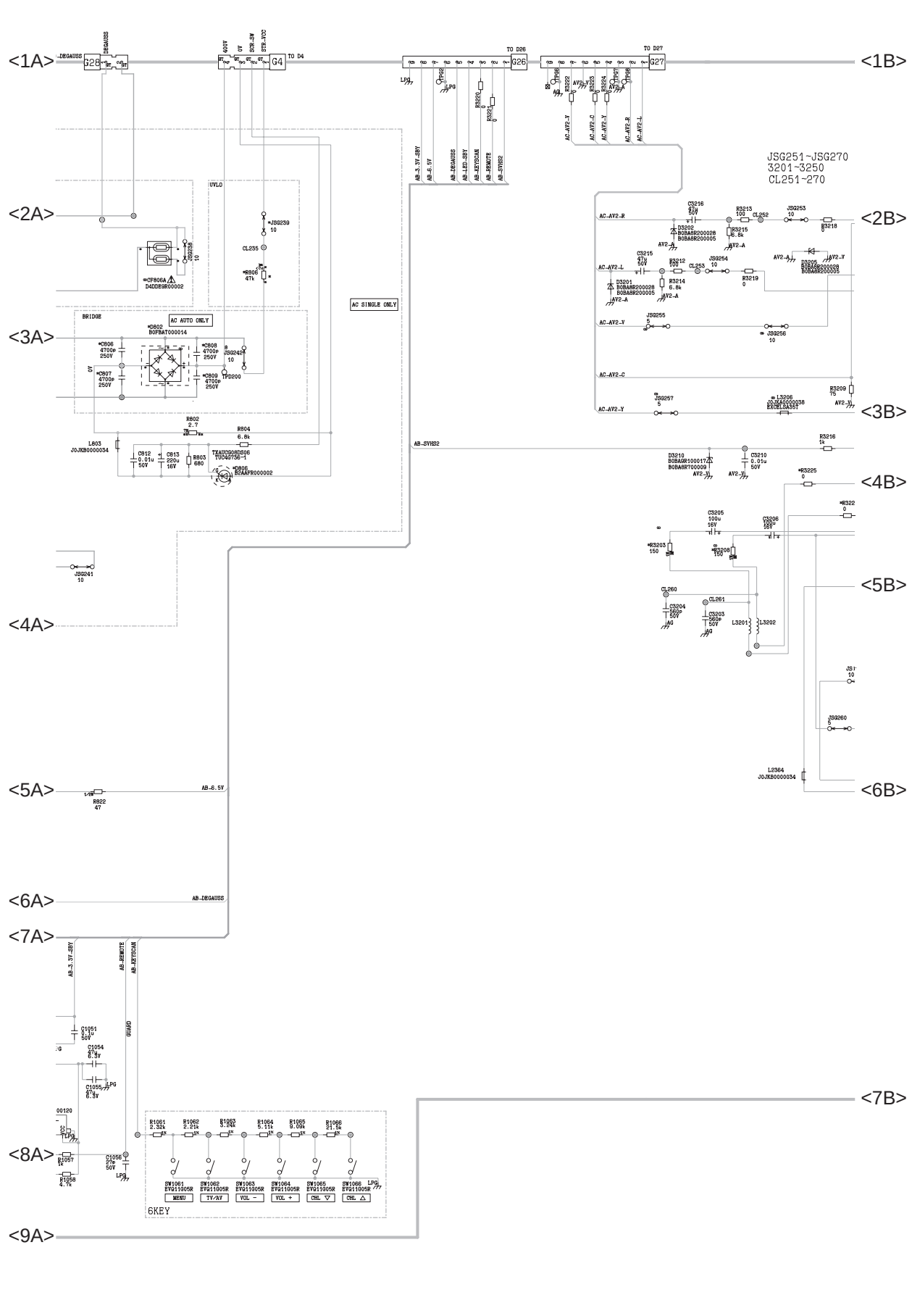
JSG251~JSG270
3201~3250
CL251~270
AC SINGLE ONLY
AC AUTO ONLY
BRIDGE
UVLO
6KEY
MENU
TV/AV
VOL −
VOL +
CHL ▽
CHL △
<1A>
<1B>
<2A>
<2B>
<3A>
<3B>
<4A>
<4B>
<5A>
<5B>
<6A>
<6B>
<7A>
<7B>
<8A>
<9A>

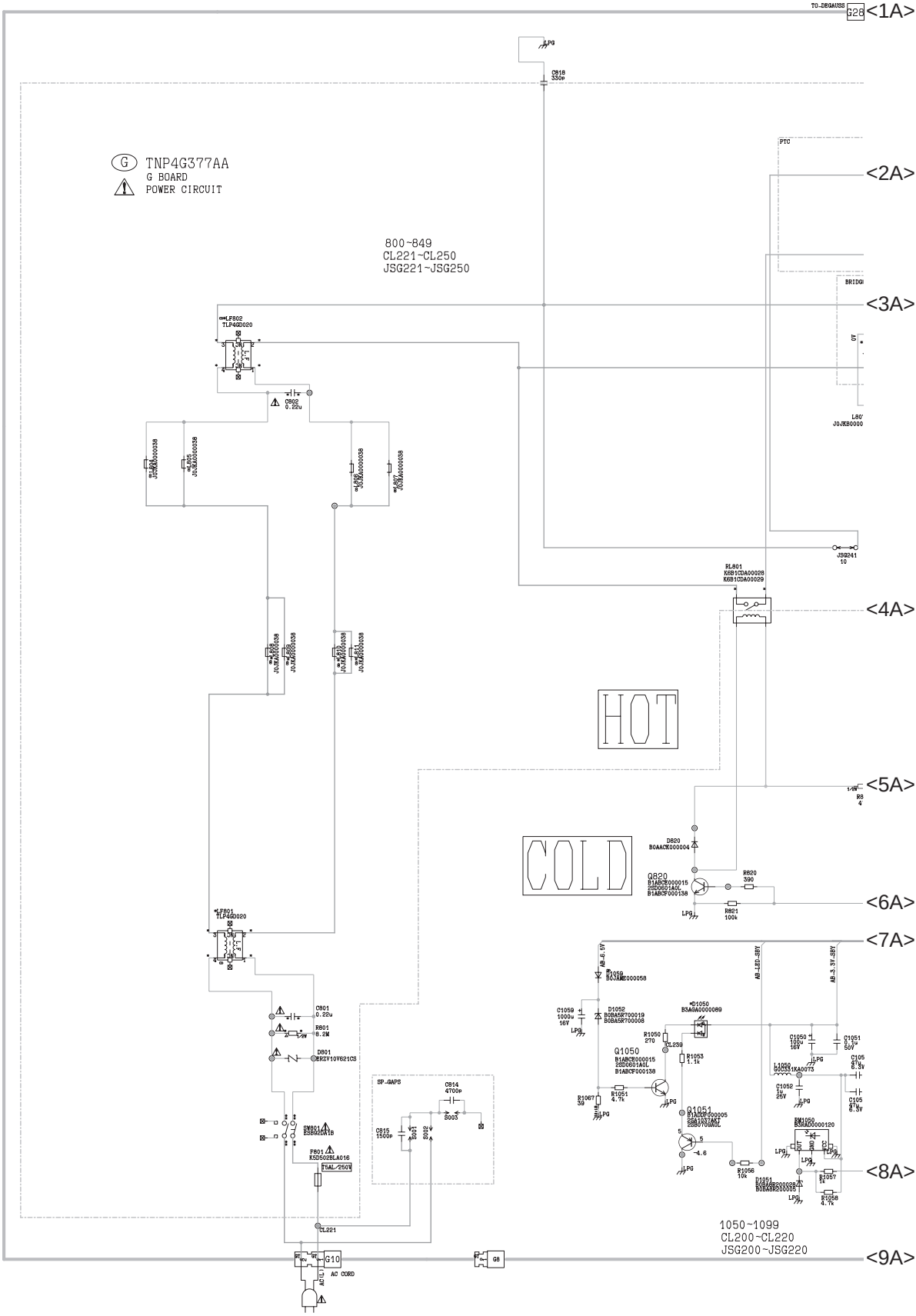

TO-DEGAUSS
G28
<1A>
<2A>
<3A>
<4A>
<5A>
<6A>
<7A>
<8A>
<9A>
TNP4G377AA
G BOARD
POWER CIRCUIT
800~849
CL221~CL250
JSG221~JSG250
HOT
COLD
1050~1099
CL200~CL220
JSG200~JSG220
AC CORD
G10
G8

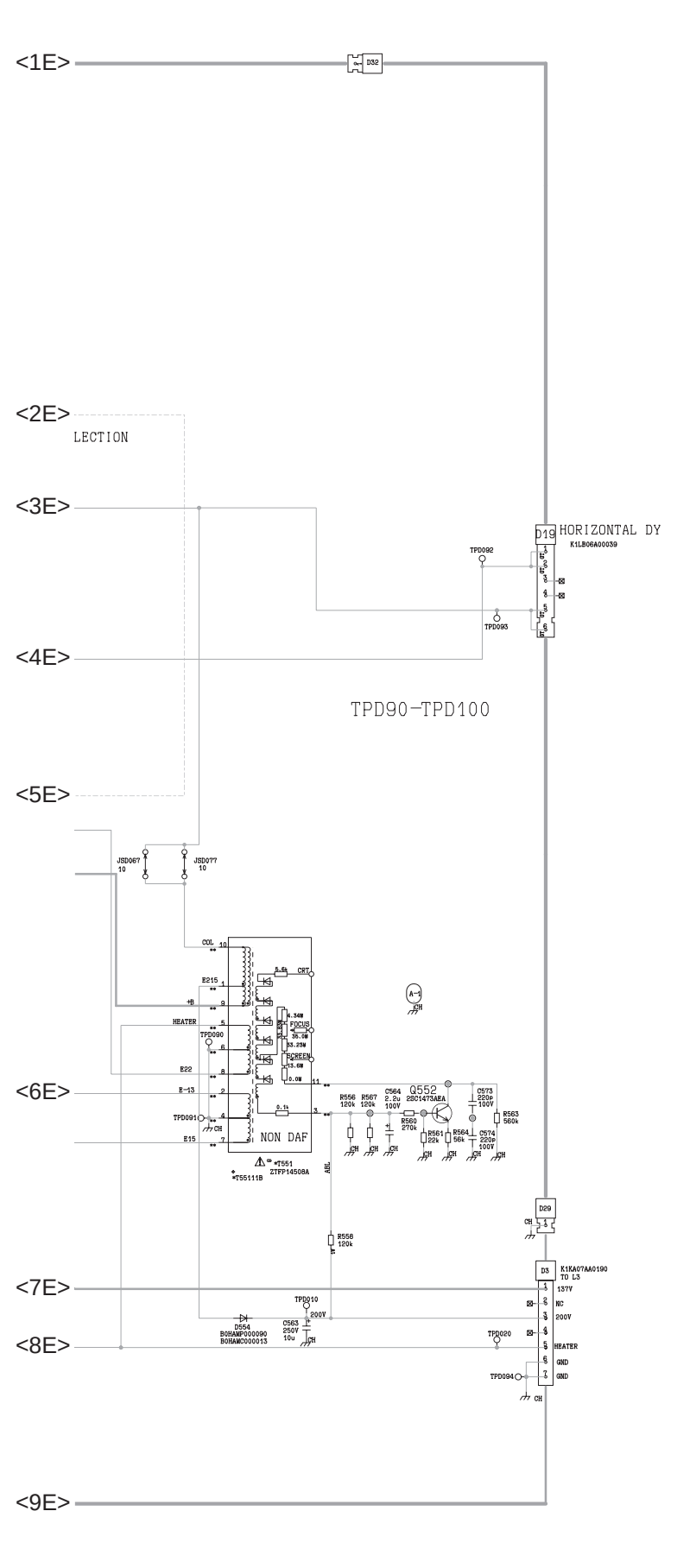
D32
D19
HORIZONTAL DY
K1LB06A00039
TPD092
TPD093
TPD90-TPD100
JSD067
10
JSD077
10
COIL
CRT
E215
+B
HEATER
TPD090
FOCUS
SCREEN
E22
E-13
TPD091
E15
NON DAF
*T551
ZTFP14508A
*T55111B
Q552
2SC1473AEA
R556
120k
R567
120k
C564
2.2u
100V
R560
270k
R561
22k
R564
56k
C573
220p
100V
C574
220p
100V
R563
560k
R558
120k
D29
D3
K1KA07AA0190
TO L3
137V
NC
200V
HEATER
GND
GND
TPD010
200V
D554
B0HAMP000090
B0HAWC000013
C563
250V
10u
TPD020
TPD094
A-4
CH

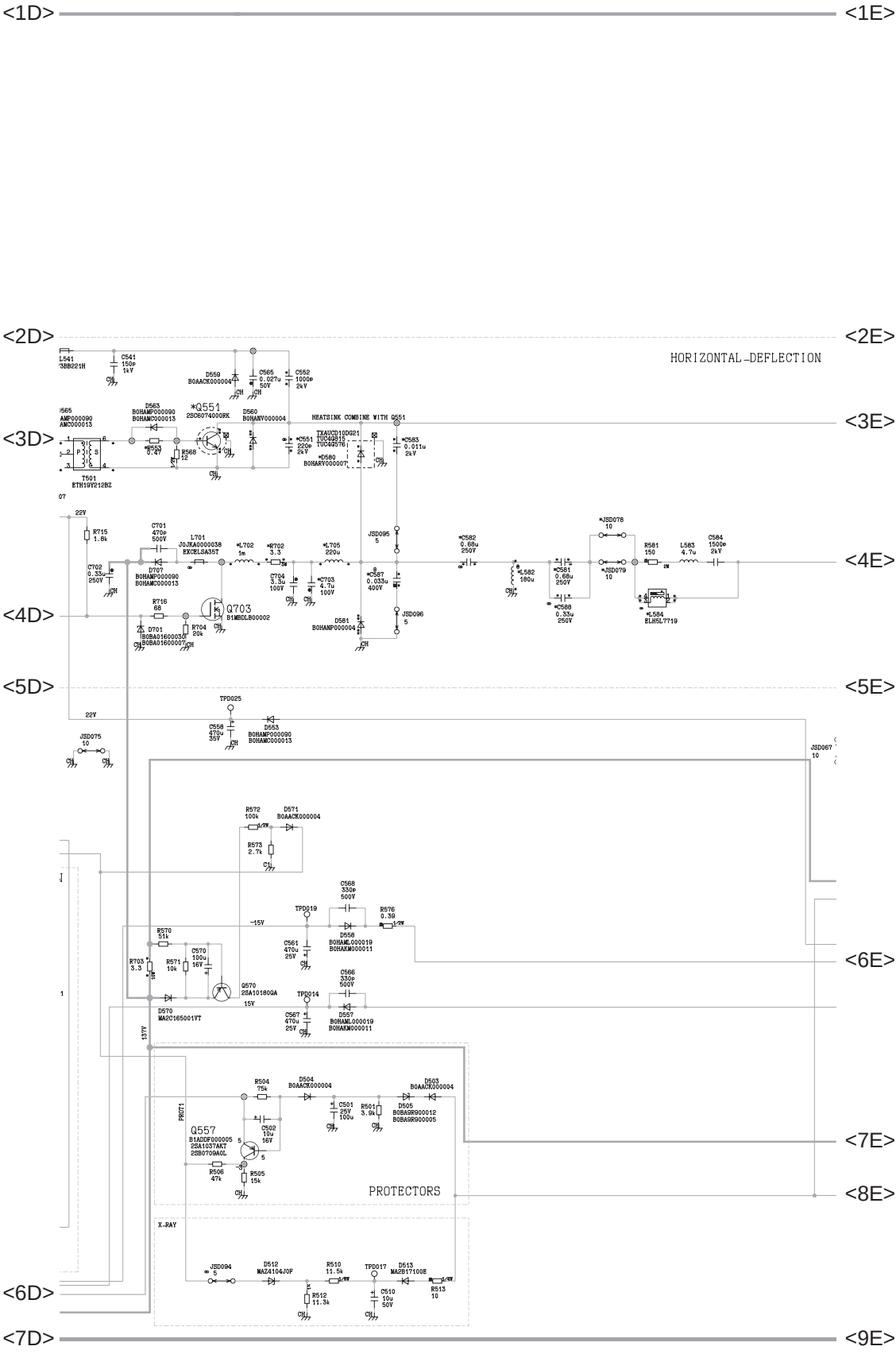

<1D>
<1E>
<2D>
<2E>
<3D>
<3E>
<4D>
<4E>
<5D>
<5E>
<6D>
<6E>
<7D>
<7E>
<8E>
<9E>
HORIZONTAL_DEFLECTION
HEATSINK COMBINE WITH Q551
*Q551
2SC6074000RK
T501
ETH19Y212BZ
Q703
B1MBDLB00002
Q557
B1ADDF000005
2SA1037AKT
2SB0709AOL
PROTECTORS
X-RAY

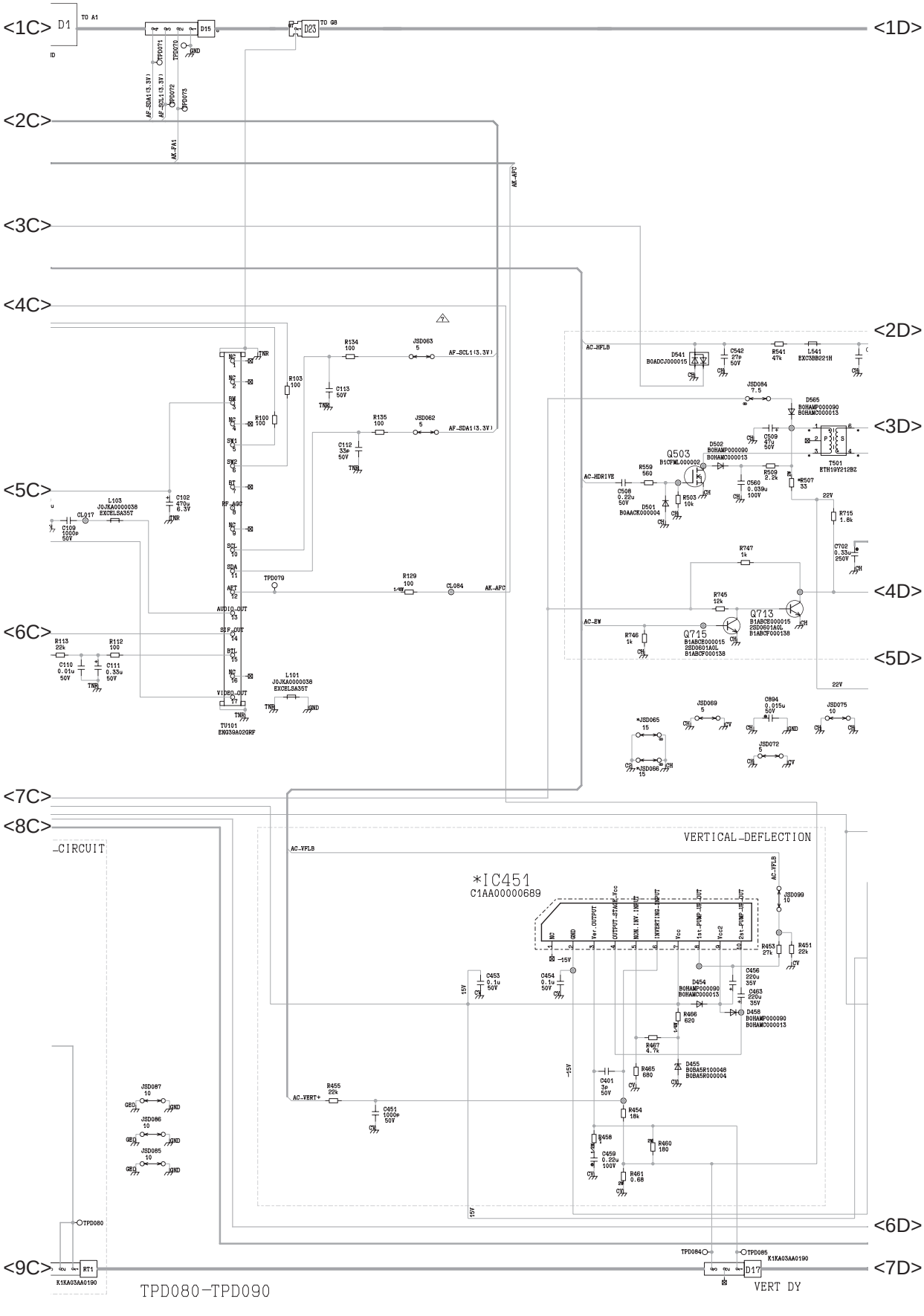

<1C>
<1D>
<2C>
<2D>
<3C>
<3D>
<4C>
<4D>
<5C>
<5D>
<6C>
<6D>
<7C>
<7D>
<8C>
<9C>
D1
TO A1
D15
D23
TO G8
TPD071
TPD070
GND
AF-SDA1(3.3V)
AF-SCL1(3.3V)
TPD072
TPD073
AK-FA1
AK-AFC
R134
100
JSD063
5
AF-SCL1(3.3V)
R103
100
C113
50V
R100
100
R135
100
JSD062
5
AF-SDA1(3.3V)
C112
33p
50V
NC
BM
SW1
SW2
BT
RF-AGC
SCL
SDA
AET
AUDIO-OUT
SEF-OUT
BTL
VIDEO-OUT
TNR
TPD079
R129
100
CL084
AK-AFC
L103
J0JKA0000038
EXCELSA35T
CL017
C109
1000p
50V
C102
470u
6.3V
R113
22k
R112
100
C110
0.01u
50V
C111
0.33u
50V
L101
J0JKA0000038
EXCELSA35T
TU101
EN039A02GRF
AC-HFLB
D541
B0ADCJ000015
C542
27p
50V
R541
47k
L541
EXC3BB221H
JSD084
7.5
D565
B0HAMP000090
B0HAMC000013
C509
47u
50V
T501
ETH19Y212BZ
Q503
B1CFML000002
D502
B0HAMP000090
B0HAMC000013
R559
560
AC-HDRIVE
C508
0.22u
50V
D501
B0AACK000004
R503
10k
C560
0.039u
100V
R509
2.2k
*R507
33
22V
R715
1.8k
C702
0.33u
250V
R747
1k
R745
12k
Q713
B1ABCE000015
2SD0601A0L
B1ABCF000138
AC-EW
R746
1k
Q715
B1ABCE000015
2SD0601A0L
B1ABCF000138
JSD069
5
C894
0.015u
50V
JSD075
10
*JSD065
15
*JSD066
15
JSD072
5
VERTICAL-DEFLECTION
AC-VFLB
*IC451
C1AA00000689
Ver.OUTPUT
OUTPUT-STAGE-Vcc
NON.INV.INPUT
INVERTING-INPUT
Vcc
1st-PUMP-UP-OUT
Vcc2
2st-PUMP-UP-OUT
-15V
15V
C453
0.1u
50V
C454
0.1u
50V
C456
220u
35V
C463
220u
35V
D454
B0HAMP000090
B0HAMC000013
D458
B0HAMP000090
B0HAMC000013
R466
620
R467
4.7k
D455
B0BA5R100048
B0BA5R000004
R465
680
C401
3p
50V
AC-VERT+
R455
22k
C451
1000p
50V
R454
18k
R458
1
R460
180
C459
0.22u
100V
R461
0.68
JSD099
10
R453
27k
R451
22k
JSD087
10
JSD086
10
JSD085
10
GEO
TPD080
RT1
K1KA03AA0190
TPD080-TPD090
TPD084
TPD085
D17
K1KA03AA0190
VERT DY

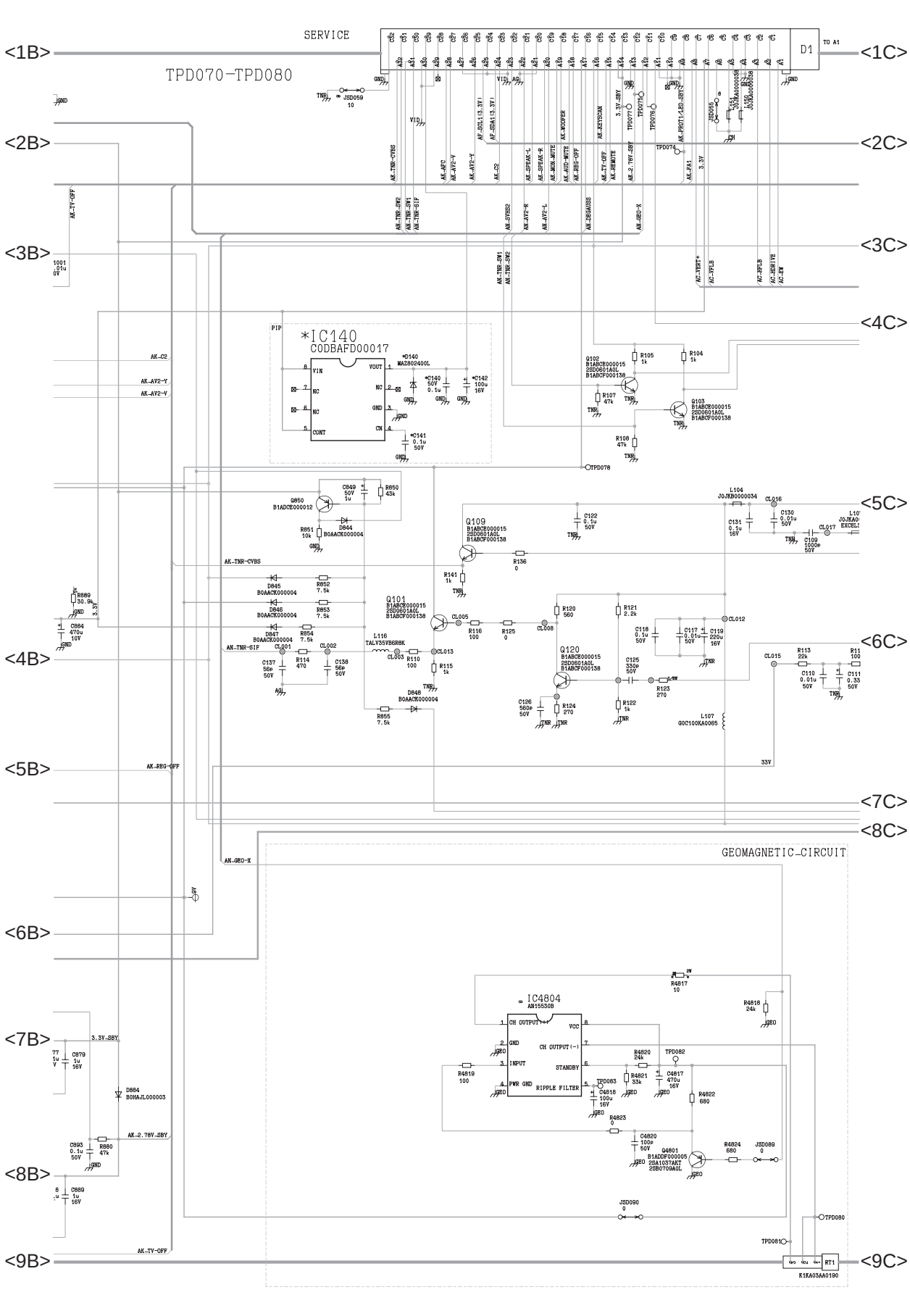

SERVICE
TPD070-TPD080
D1
TO A1
<1B>
<1C>
<2B>
<2C>
<3B>
<3C>
<4B>
<4C>
<5B>
<5C>
<6B>
<6C>
<7B>
<7C>
<8B>
<8C>
<9B>
<9C>
*IC140
C0DBAFD00017
Q101
B1ABCE000015
2SD0601A0L
B1ABCF000138
Q109
B1ABCE000015
2SD0601A0L
B1ABCF000138
Q120
B1ABCE000015
2SD0601A0L
B1ABCF000138
Q850
B1ADCE000012
Q102
B1ABCE000015
2SD0601A0L
B1ABCF000138
Q103
B1ABCE000015
2SD0601A0L
B1ABCF000138
L104
J0JKB0000034
L107
G0C100KA0065
L116
TALV35VB6R8K
GEOMAGNETIC-CIRCUIT
IC4804
AN15530B
CH OUTPUT(+)
CH OUTPUT(-)
VCC
GND
INPUT
STANDBY
PWR GND
RIPPLE FILTER
Q4801
B1ADDF000005
2SA1037AKT
2SB0709A0L
D884
B0HAJL000003
RT1
K1KA03AA0190

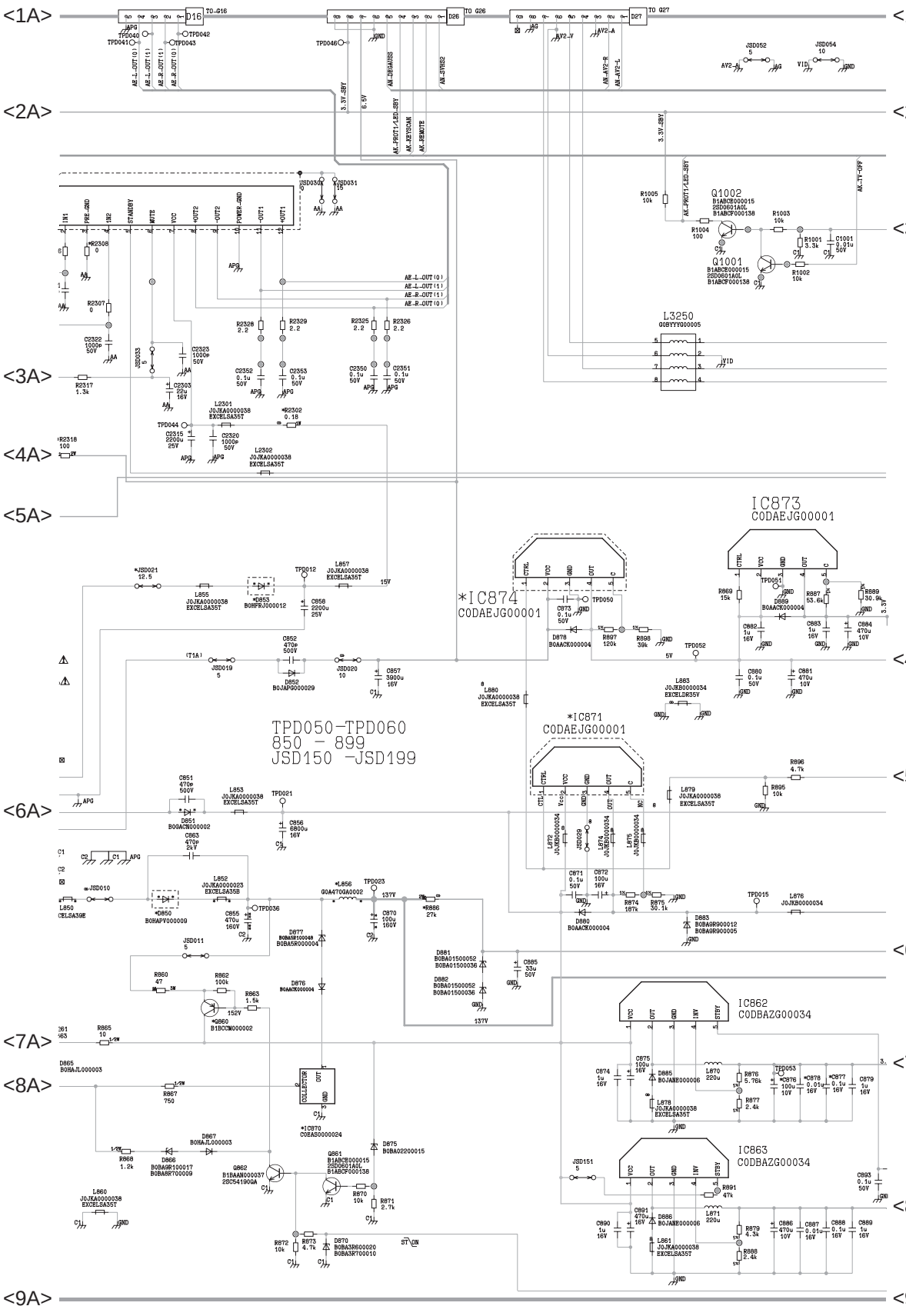
TPD050-TPD060
850 - 899
JSD150 -JSD199
IC873
C0DAEJG00001
*IC874
C0DAEJG00001
*IC871
C0DAEJG00001
IC862
C0DBAZG00034
IC863
C0DBAZG00034
Q1002
B1ABCE000015
2SD0601A0L
B1ABCF000138
Q1001
B1ABCE000015
2SD0601A0L
B1ABCF000138
L3250
G0BYYY000005
*IC870
C0EAS0000024
Q861
B1ABCB000015
2SD0601A0L
B1ABCF000138
Q862
B1BAAN000037
2SC5419GQA
*Q860
B1BCCM000002
*D850
B0HAPV000009
D851
B0GACN000002
D852
B0JAPS000029
*D853
B0HFRJ000012
D861
B0BA01500052
B0BA01500036
D882
B0BA01500052
B0BA01500036
D883
B0BAGR000012
B0BAGR000005
D875
B0BA02200015
D870
B0BA3R600020
B0BA3R700010
D866
B0BAGR100017
B0BA8R700009
D867
B0HAJL000003
D865
B0HAJL000003
D877
B0BAGR100048
B0BA5R000004
D878
B0AACK000004
D880
B0AACK000004
D885
B0JAME000006
D886
B0JAME000006
D889
B0AACK000004
D878
B0AACK000004
L855
J0JKA0000038
EXCELSA35T
L857
J0JKA0000038
EXCELSA35T
L853
J0JKA0000038
EXCELSA35T
L852
J0JKA0000023
EXCELSA35B
L850
EXCELSA39E
L860
J0JKA0000038
EXCELSA35T
L2301
J0JKA0000038
EXCELSA35T
L2302
J0JKA0000038
EXCELSA35T
L880
J0JKA0000038
EXCELSA35T
L883
J0JKB0000034
EXCELDR35V
L879
J0JKA0000038
EXCELSA35T
L872
J0JKB0000034
L874
J0JKB0000034
L875
J0JKB0000034
L876
J0JKB0000034
L870
220u
L871
220u
L861
J0JKA0000038
EXCELSA35T
L878
J0JKA0000038
EXCELSA35T
*L856
G0A470GA0002
TO G16
TO G26
TO Q27
D16
D26
D27
TPD040
TPD041
TPD042
TPD043
TPD048
TPD012
TPD021
TPD023
TPD036
TPD044
TPD050
TPD051
TPD052
TPD053
TPD015
JSD019
JSD020
JSD010
JSD011
JSD021
JSD031
JSD032
JSD052
JSD054
JSD151
JSD033
*R2302
0.18
R2317
1.3k
R2318
100
R2307
0
*R2308
0
R2328
2.2
R2329
2.2
R2325
2.2
R2326
2.2
R1005
10k
R1004
100
R1003
10k
R1001
3.3k
R1002
10k
R869
15k
R887
53.6k
R889
30.0k
R897
120k
R898
39k
R896
4.7k
R895
10k
R874
187k
R875
30.1k
R876
5.76k
R877
2.4k
R879
4.3k
R888
2.4k
R891
47k
R860
10
R862
100k
R863
1.5k
R865
10
R867
750
R868
1.2k
R870
10k
R871
2.7k
R872
10k
R873
4.7k
R886
27k
*R876
100u
*R878
0.01u
*R877
0.01u
C852
470p
500V
C851
470p
500V
C863
470p
2kV
C855
470u
160V
C856
6800u
16V
C857
3900u
16V
C858
2200u
25V
C2322
1000p
50V
C2323
1000p
50V
C2303
22u
16V
C2315
2200u
25V
C2320
1000p
50V
C2352
0.1u
50V
C2353
0.1u
50V
C2350
0.1u
50V
C2351
0.1u
50V
C973
0.1u
50V
C871
0.1u
50V
C872
100u
16V
C885
33u
50V
C1001
0.01u
50V
C880
0.1u
50V
C881
470u
10V
C882
1u
16V
C883
1u
16V
C884
470u
10V
C874
1u
16V
C875
100u
16V
C876
100u
10V
C878
0.01u
16V
C877
0.01u
16V
C879
1u
16V
C890
1u
16V
C891
470u
16V
C886
470u
10V
C887
0.01u
16V
C888
0.1u
16V
C889
1u
16V
C893
0.1u
50V
AE-L-OUT(0)
AE-L-OUT(1)
AE-R-OUT(1)
AE-R-OUT(0)
3.3V-SBY
6.5V
AK-FRONT-LED-SBY
AK-KEYSCAN
AK-REMOTE
AM-SYNCSUB
AM-SYNCSB
AM-AV2-R
AM-AV2-L
AV2-V
AV2-A
AV2-L
VID
AK-TV-OFF
STANDBY
MUTE
VCC
OUT2
POWER-GND
OUT1
PRE-GND
IN1
IN2
CTRL
GND
OUT
COLLECTOR
INV
STBY
ST-ON
15V
5V
137V
152V
APG
AAJ
AAA
AAG
GND

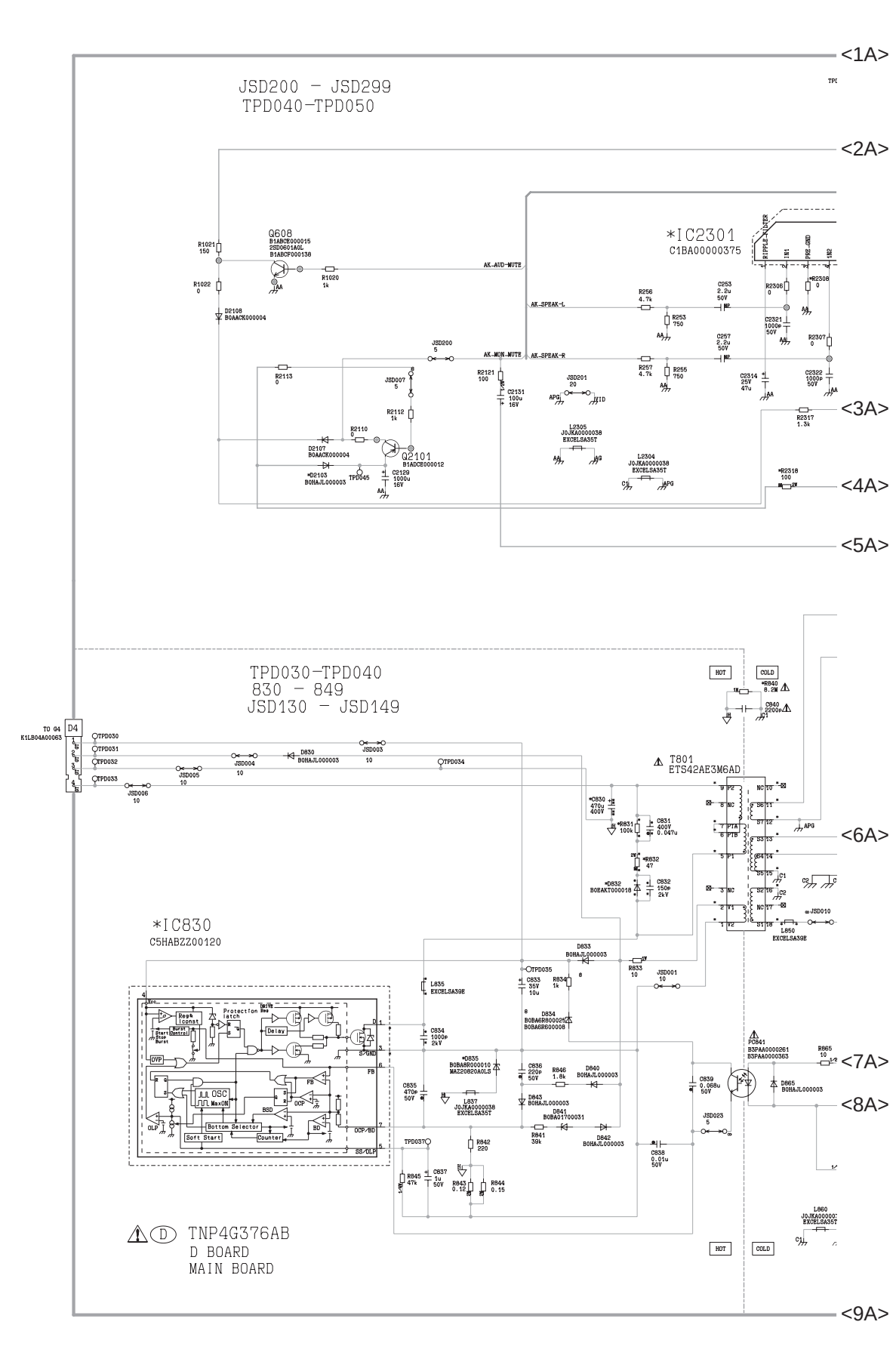

JSD200 - JSD299
TPD040-TPD050
*IC2301
C1BA00000375
Q608
B1ABCE000015
2SD0601A0L
B1ABCF000138
Q2101
B1ADCE000012
TPD030-TPD040
830 - 849
JSD130 - JSD149
T801
ETS42AE3M6AD
*IC830
C5HABZZ00120
TNP4G376AB
D BOARD
MAIN BOARD
<1A>
<2A>
<3A>
<4A>
<5A>
<6A>
<7A>
<8A>
<9A>

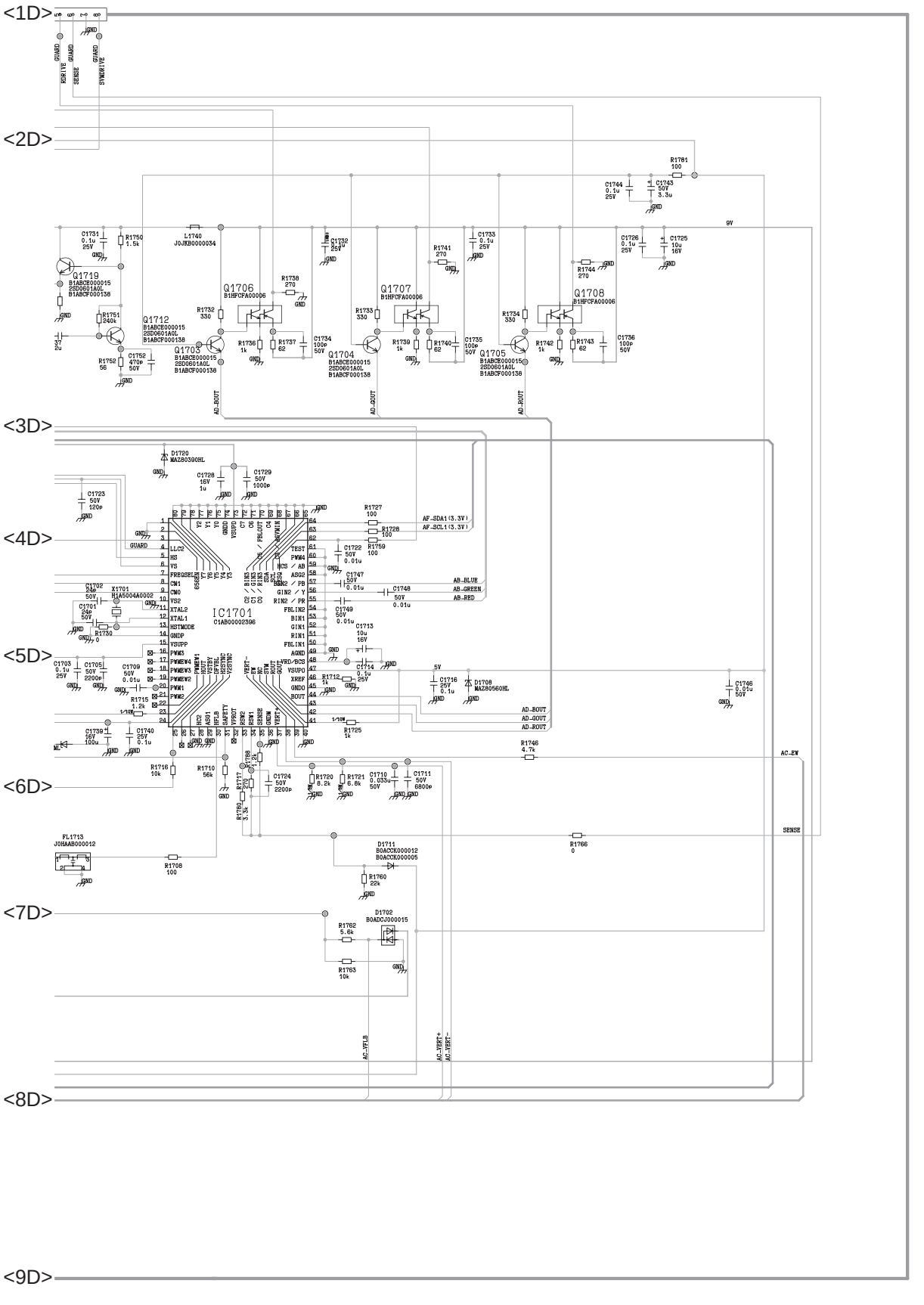

<1D>
<2D>
<3D>
<4D>
<5D>
<6D>
<7D>
<8D>
<9D>
GUARD
RDRIVE
SENSE
SYNDRIVE
GND
9V
L1740
J0JKB0000034
Q1719
B1ABCE000015
2SD0601A0L
B1ABCF000138
Q1712
B1ABCE000015
2SD0601A0L
B1ABCF000138
Q1703
B1ABCE000015
2SD0601A0L
B1ABCF000138
Q1706
B1HFCFA00006
Q1704
B1ABCE000015
2SD0601A0L
B1ABCF000138
Q1707
B1HFCFA00006
Q1705
B1ABCE000015
2SD0601A0L
B1ABCF000138
Q1708
B1HFCFA00006
AD-BOUT
AD-GOUT
AD-ROUT
D1720
MAZ80390HL
IC1701
C1AB00002396
X1701
H1A5004A0002
AF-SDA1(3.3V)
AF-SCL1(3.3V)
AB-BLUE
AB-GREEN
AB-RED
D1708
MAZ80560HL
AC-EW
SENSE
FL1713
J0HAAB000012
D1711
B0ACCK000012
B0ACCK000005
D1702
B0ADCJ000015
AC-VFLB
AC-VERT+
AC-VERT-

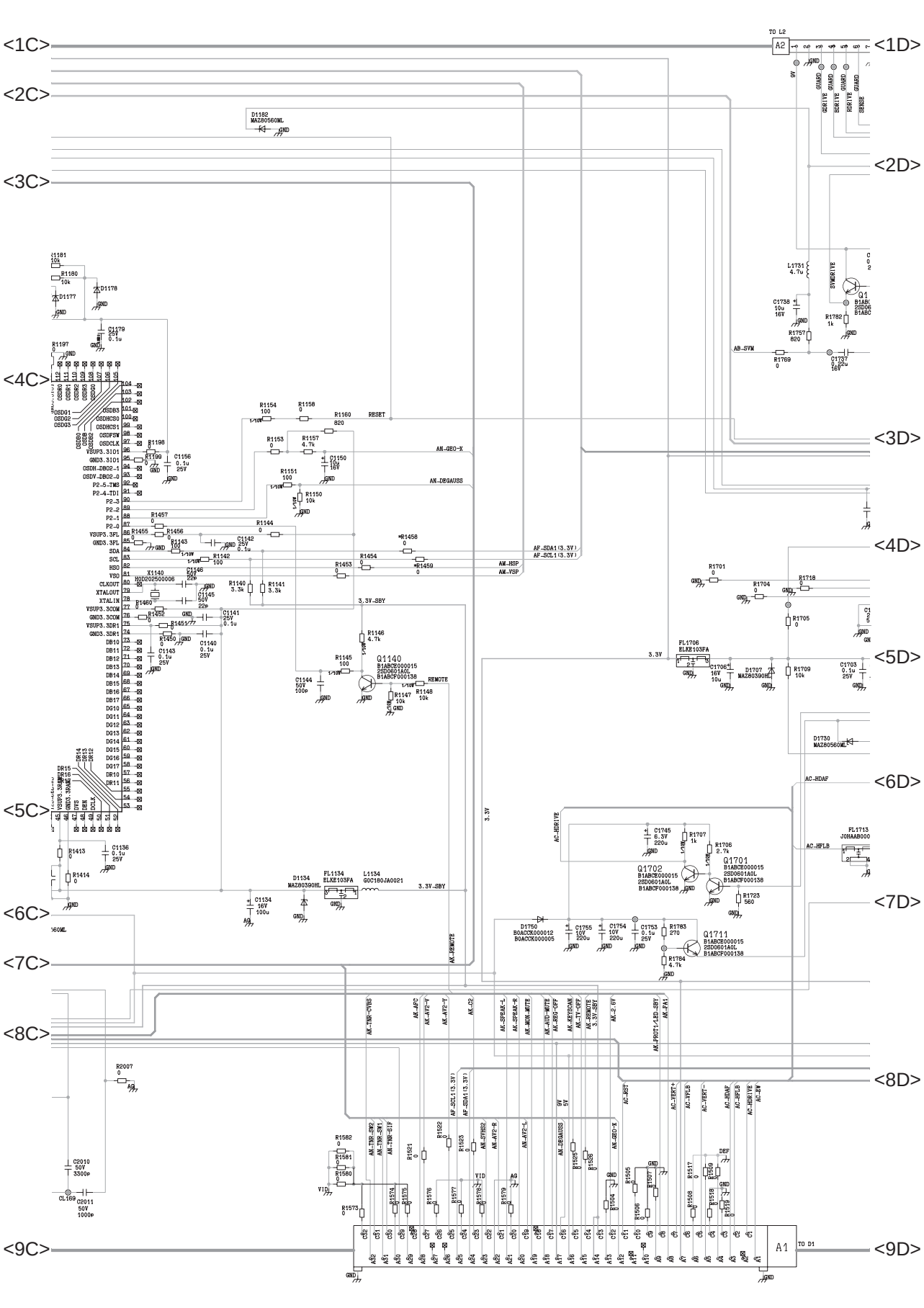
TO L2
A2
GUARD
GDRIVE
BDRIVE
HDRIVE
SENSE
D1182
MAZ80560ML
L1731
4.7u
SVMDRIVE
C1738
10u
16V
R1782
1k
R1757
820
AB-SVM
R1769
0
C1737
0.22u
16V
R1181
10k
R1180
10k
D1177
D1178
C1179
0.1u
R1197
R1198
R1199
C1156
0.1u
25V
OSDD1
OSDD2
OSDD3
OSDB3
OSDHCS0
OSDHCS1
OSDFSW
OSDCLK
VSUP3.3IO1
GND3.3IO1
OSDH-DBO2-1
OSDV-DBO2-0
P2-5-TMS
P2-4-TDI
P2-3
P2-2
P2-1
P2-0
VSUP3.5PL
GND3.5PL
SDA
SCL
HSO
VSO
CLKOUT
XTALOUT
XTALIN
VSUP3.3COM
GND3.3COM
VSUP3.3DR1
GND3.3DR1
DB10
DB11
DB12
DB13
DB14
DB15
DB16
DB17
DG10
DG11
DG12
DG13
DG14
DG15
DG16
DG17
DG18
DG11
DR15
DR16
DR14
DR13
DR12
VSUP3.3BUF
GND3.3BUF
DVS
DEN
DCLK
R1154
100
R1156
0
R1160
820
RESET
R1153
0
R1157
4.7k
C1150
10u
16V
AN-GEO-X
R1151
100
AN-DEGAUSS
R1150
10k
R1457
0
R1456
0
R1455
0
R1143
100
C1142
25V
0.1u
R1144
0
R1458
0
R1142
100
R1454
0
R1453
0
R1459
0
AF-SDA(3.3V)
AF-SCL(3.3V)
AN-HSP
AN-VSP
X1140
H0D202500006
R1448
22p
C1145
50V
22p
R1140
3.3k
R1141
3.3k
R1460
0
R1452
0
R1451
0
C1141
25V
0.1u
3.3V-SBY
R1450
0
C1140
0.1u
25V
C1143
0.1u
25V
R1146
4.7k
R1145
100
Q1140
B1ABCE000015
2SD0601A0L
B1ABCF000138
C1144
100p
REMOTE
R1147
10k
R1148
10k
R1701
0
R1704
0
R1718
R1705
0
FL1706
ELKE103FA
3.3V
C1706
16V
10u
D1707
MAZ80390ML
R1709
10k
C1703
0.1u
25V
D1730
MAZ80560ML
AC-HDAF
AC-HDRIVE
C1745
6.3V
220u
R1707
1k
R1706
2.7k
Q1702
B1ABCE000015
2SD0601A0L
B1ABCF000138
Q1701
B1ABCE000015
2SD0601A0L
B1ABCF000138
R1723
560
FL1713
J0HAAB000
AC-HFLB
R1413
0
C1136
0.1u
25V
R1414
0
D1134
MAZ80390HL
FL1134
ELKE103FA
L1134
G0C180JA0021
3.3V-SBY
C1134
16V
100u
D1750
B0ACCK000012
B0ACCK000005
C1755
10V
220u
C1754
10V
220u
C1753
0.1u
25V
R1783
270
Q1711
B1ABCE000015
2SD0601A0L
B1ABCF000138
R1784
4.7k
AK-REMOTE
AK-TNR-CVBS
AK-AFC
AK-AV2-Y
AK-AV2-V
AK-C2
AK-SPEAK-L
AK-SPEAK-R
AK-MOM_MUTE
AK-AUD-MUTE
AK-DEG-OFF
AK-KEYSCAN
AK-TV-OFF
AK-REMOTE
3.3V-SBY
AK-2.5V
AK-PROT1-LED-SBY
AK-FAI
R2007
0
AG
AF-SCL(3.3V)
AF-SDA(3.3V)
AC-RST
AC-VERT+
AC-HFLB
AC-VERT-
AC-HDAF
AC-HFLB
AC-HDRIVE
AC-2V
C2010
50V
3300p
C2011
50V
1000p
CL169
R1582
0
R1581
R1580
VID
R1574
R1575
R1573
0
AN-TNR-SW2
AN-TNR-SW1
AN-TNR-SIF
R1521
0
R1522
0
R1523
0
AN-SYNC2
AN-AV2-R
AN-AV2-L
AN-DEGAUSS
R1525
R1526
AN-GEO-X
R1576
R1577
R1578
R1579
R1504
R1505
R1506
R1507
R1517
0
R1509
R1508
R1518
R1519
DEF
A1
TO D1
GND

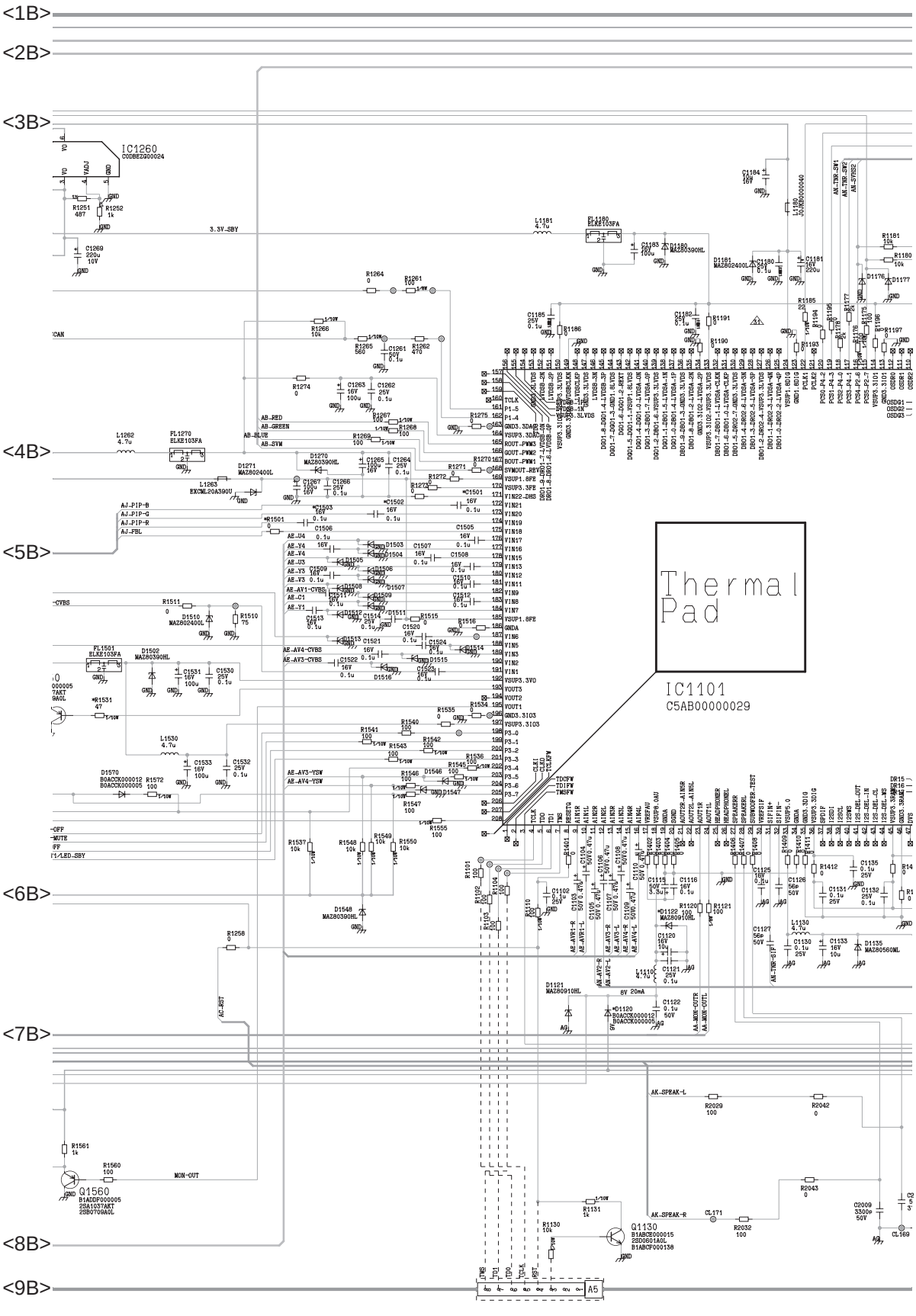

<1B>
<1C>
<2B>
<2C>
<3B>
<3C>
<4B>
<4C>
<5B>
<5C>
<6B>
<6C>
<7B>
<7C>
<8B>
<8C>
<9B>
<9C>
IC1260
C0DBEZG00024
Thermal Pad
IC1101
C5AB00000029
Q1560
B1ADDF000005
2SA1037AKT
2SB0709A0L
Q1130
B1ABCE000015
2SD0601A0L
B1ABCF000138
A5

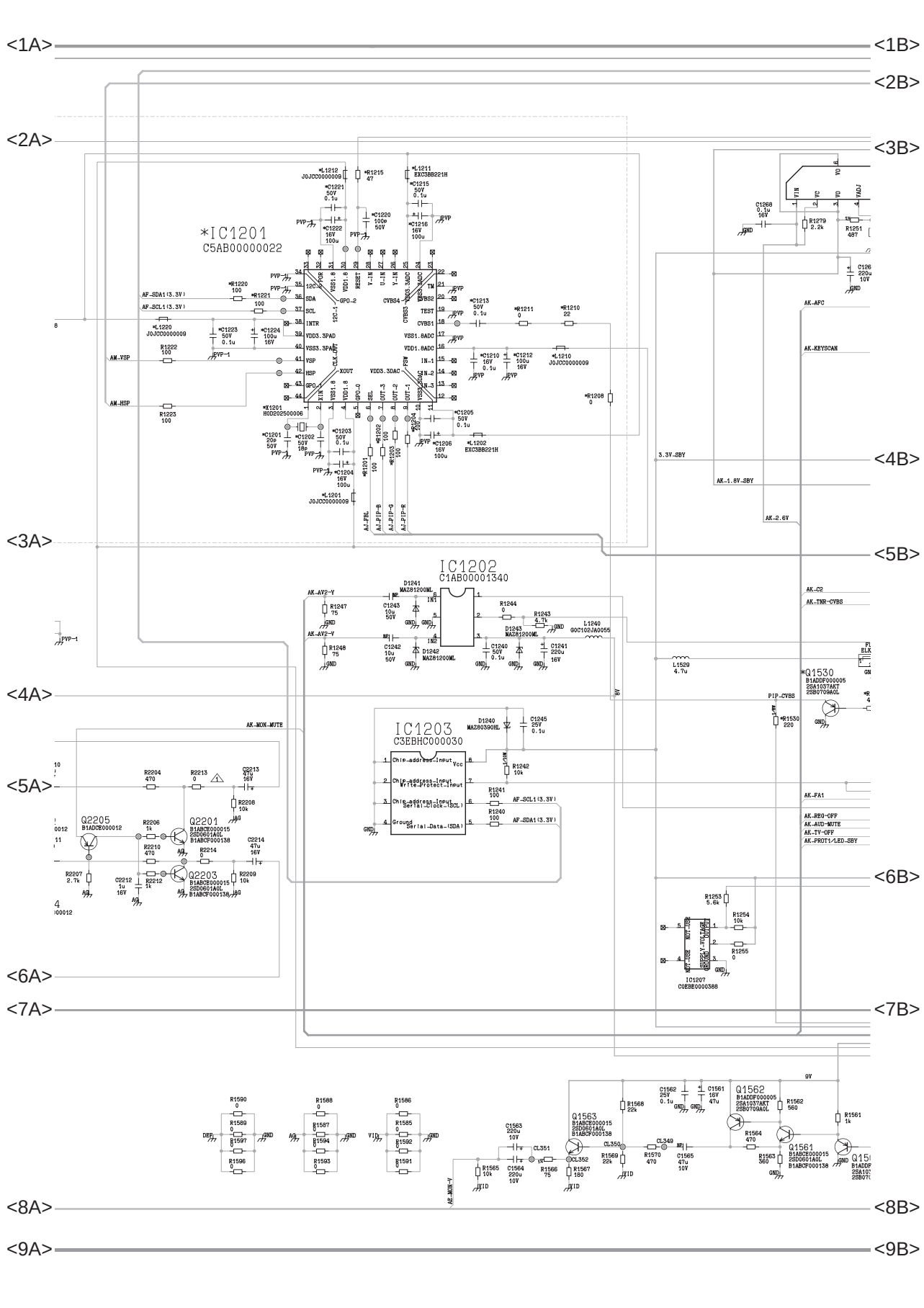

<1A>
<1B>
<2A>
<2B>
<3A>
<3B>
<4A>
<4B>
<5A>
<5B>
<6A>
<6B>
<7A>
<7B>
<8A>
<8B>
<9A>
<9B>
*IC1201
C5AB00000022
IC1202
C1AB00001340
IC1203
C3EBHC000030
*Q1530
B1ADDF000005
2SA1037AKT
2SB0709A0L
Q2205
B1ADCE000012
Q2201
B1ABCE000015
2SD0601A0L
B1ABCF000138
Q2203
B1ABCE000015
2SD0601A0L
B1ABCF000138
Q1563
B1ABCE000015
2SD0601A0L
B1ABCF000138
Q1562
B1ADDF000005
2SA1037AKT
2SB0709A0L
Q1561
B1ABCE000015
2SD0601A0L
B1ABCF000138
IC1207
C0EBE0000388
AK-AFC
AK-KEYSCAN
AK-1.8V-SBY
AK-2.6V
AK-C2
AK-TNR-CVBS
AK-FA1
AK-REG-OFF
AK-AUD-MUTE
AK-TV-OFF
AK-PROT1/LED-SBY
AK-MON-MUTE
AK-AV2-Y
AF-SDA1(3.3V)
AF-SCL1(3.3V)
AM-VSP
AM-HSP
3.3V-SBY
PIP-CVBS
AJ-PIP-B
AJ-PIP-G
AJ-PIP-R
AJ-FBL

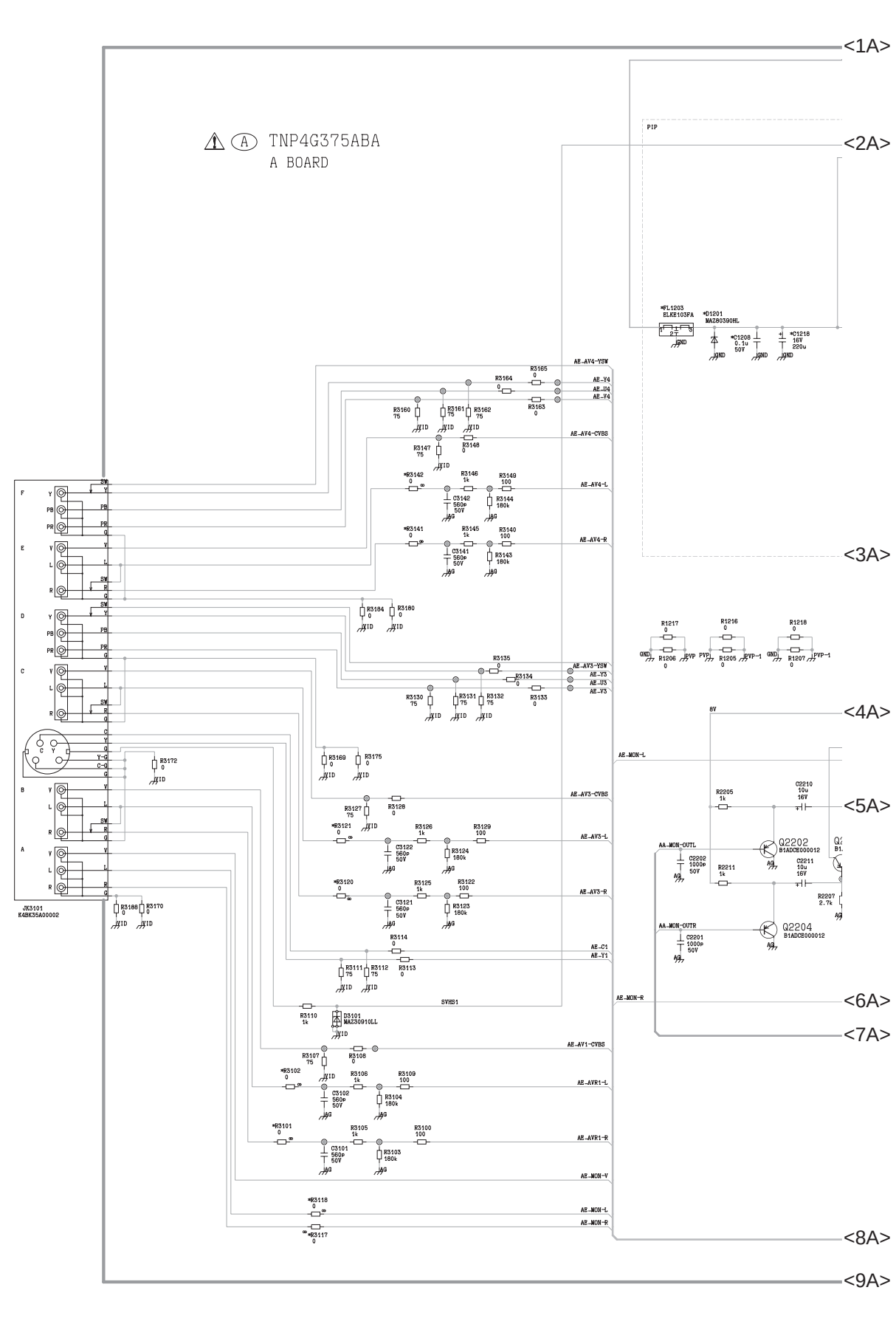
TNP4G375ABA
A BOARD
PIP
*FL1203
ELKE103FA
*D1201
MAZ80390HL
*C1208
0.1u
50V
*C1218
16V
220u
GND
AE-AV4-YSW
AE-Y4
AE-U4
AE-V4
AE-AV4-CVBS
AE-AV4-L
AE-AV4-R
AE-AV3-YSW
AE-Y3
AE-U3
AE-V3
AE-AV3-CVBS
AE-AV3-L
AE-AV3-R
AE-C1
AE-Y1
SVHS1
AE-AV1-CVBS
AE-AVR1-L
AE-AVR1-R
AE-MON-V
AE-MON-L
AE-MON-R
AA-MON-OUTL
AA-MON-OUTR
8V
Q2202
B1ADCE000012
Q2204
B1ADCE000012
D3101
MAZ30910LL
JK3101
K4BK35A00002
<1A>
<2A>
<3A>
<4A>
<5A>
<6A>
<7A>
<8A>
<9A>